BURN MIZER™ CREMATOR
OIL & GAS Fired
Instruction and Operations Manual

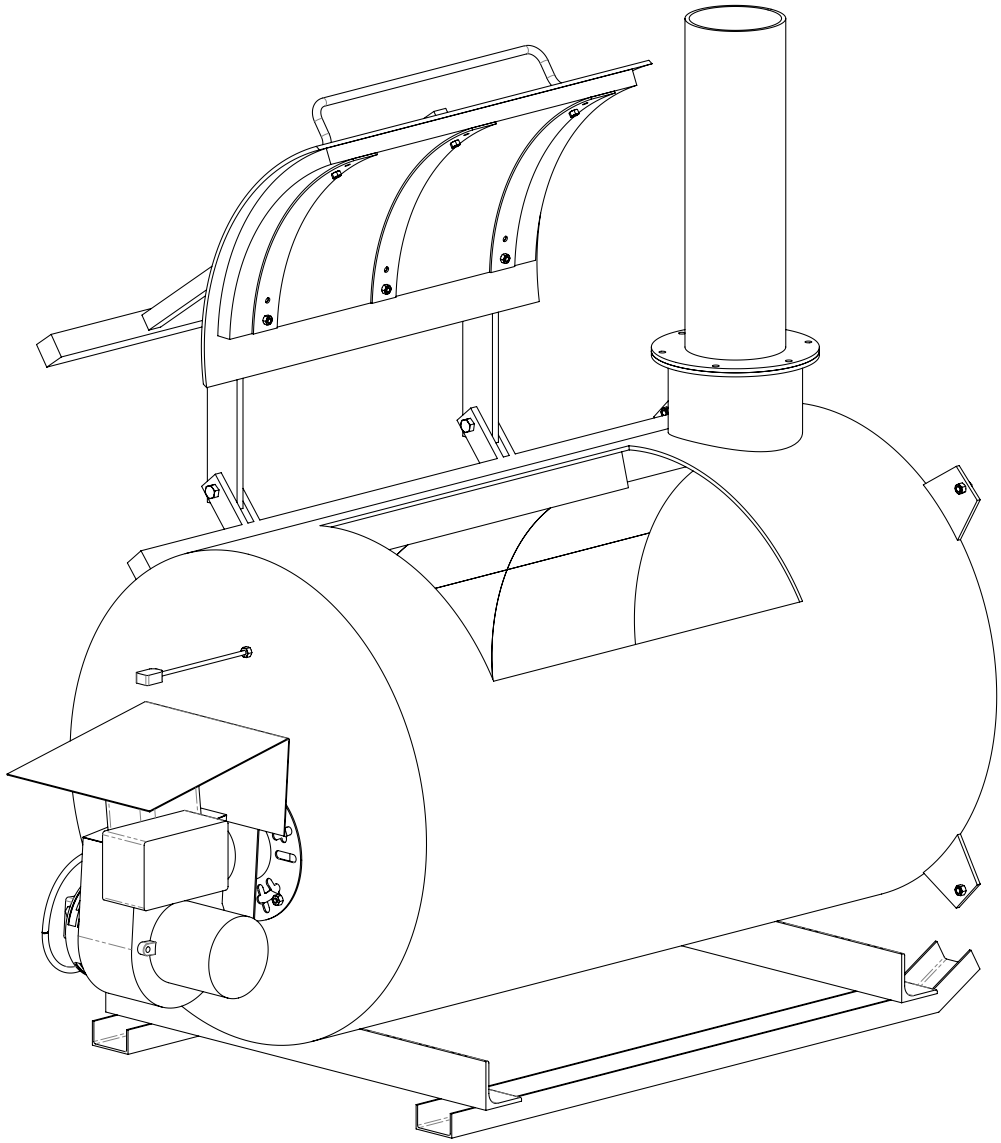

990010
REV [M]

©2026 Valco Industries, Inc.

Contents

Table of Contents 2
Warranty 4
Symbols 4
General Information 5
Cremator Setup 6
Cremator Set-Up for either Oil or Gas Burner 6
Exhaust Stack or Secondary Assembly 7
Exhaust Stack or Secondary Burner Assembly - (Oil or Gas Burners) 7
Cremator & Afterburner Sizes 8
Mounting Burners 10
Mounting Burners - (Oil or Gas Burners) 10
Sensor Installation 11
Sensor - Heat Probe - (Oil or Gas Burner) 11
Oil Burner Installation (Specific to Oil Burner ONLY) 12
Oil Burner - Fuel Line Set-Up 12
Oil Burner - Plumbing 13
Oil Burner - Digital Control with Terminal Strip Wiring Diagram 15
Oil Burner - Electronic Control Wiring Diagram 16
Oil Burner - Power and Rain Shield Installation 17
Operation 18
Operation of Burn Mizer™ Cremator Digital Control (For Oil or Gas Burner Units) 18
Operation of Burn Mizer™ Cremator Electronic Control (For Oil or Gas Burner Units) . . 19
Oil Burner - Exploded Drawing and Parts List 20
Oil Burner - Replacement Parts List 21
Oil Burner - Gun Assembly (751213) Replacement Parts List 22
Oil Burner - Maintenance and Troubleshooting 23
Digital Control Exploded & Replacement Parts List - (Oil or Gas Burner) 25
Electronic Control Exploded & Replacement Parts List - (Oil or Gas Burner) 26
Cremator - Exploded & Replacement Parts List 27

©2026 Valco Industries, Inc.

Gas Burner Installation (Specific to Gas Burner ONLY) 30
Gas Burner - Gas Line Set-up 30
Gas Burner - Primary Chamber Fuel Input 31
Gas Burner - Location 31
Gas Burner - Wiring 31
Gas Burner - Plumbing 32
Gas Burner - Gas Pressure 34
Gas Burner - Digital Control with Terminal Strip Wiring Diagram 35
Gas Burner - Electronic Control Wiring Diagram 36
Gas Burner - Power and Rain Shield Installation 37
Testing the Burner 37
Gas Burner - Exploded Drawing and Parts List 38
Gas Burner - Parts List continued with Replacement Parts 39
Gas Burner - Exploded Ignitor Regulator and Piping 40
Exploded Ignitor Control - Replacement Parts 40
Gas Burner - Maintenance and Troubleshooting 41
Customer Service 43

©2026 Valco Industries, Inc.

VAL PRODUCTS, INC. WARRANTIES

For Warranty claims information, please see the “Manufactured Products Standard Warranty” form QMS101 available from Val Products, Inc. by:

- Phone: 1-800-998-2526
- Email: marcom@val-co.com
- Online: http://val-co.it/warranty

Conditions and Limitations:

- Products and Systems involved in a warranty claim under the “Manufactured Products Standard Warranty” shall have been properly installed, maintained and operated under competent supervision, according to the instructions provided by Val Products, Inc.
- Malfunction or failure resulting from misuse, abuse, negligence, alteration, accident or lack of proper installation or maintenance shall not be considered a defect under the Warranty.

Symbols

Our concern is for your safety. The safety warnings are included in this manual as a guide to help and encourage the safe operation of your equipment. It is your responsibility to evaluate the hazards of each operation and implement the safest method of protecting yourself as owner and/or operator.



= NOTICE - Important information. Be sure to read.



= WARNING - The safety alert symbol is used on warning signs that describe the importance of a feature or explain a step that one should pay close attention to avoid problems or personal injury.







©2026 Valco Industries, Inc.

General Information

This manual covers the setup, installation, troubleshooting, maintenance and parts lists of the cremator. It does not cover the installation, requirements, warnings, testing, and general use of the Burner. You will need to refer to the Burner manual, which is included with the Burner Unit, for details on the Burner.

Costs less to operate:

Independent major university studies show the unique design of the Burn Mizer™ Cremator consumes less fuel than other national brands.*

- The Burn Mizer™ saves up to 65% on fuel consumption, utilizing a patented solid-state heat control to cycle.
- Burner on and off while maintaining optimum burn temperature.
- The heat control timer function can be set for up to 12 hours of operation using a digital control with a terminal strip, or 24 hours of operation using an electronic control.
- The patented liner uses a special insulating refractory block to reflect rather than absorb heat. The liner works like an additional burner, operating at hotter and more uniform temperatures.
- Burn Mizer™ liners can be replaced or repaired at a fraction of the cost of a new unit.
- The burner's auto ignition makes start-up quick and easy.
- The spiral flame travels the full length of the burning chamber, resulting in a cleaner, more thorough burn.

Built Tough To Last Longer:

Get twice the use of conventional units with Burn Mizer™.

- Shells constructed with heavy-duty 3/8" to 1/2" heat-tempered steel.
- Welds continuous (not "skip welded") for maximum strength.
- Two heavy reinforcement bars run the full length of the chamber ensuring the highest structural integrity.
- The patented liner is pre-cured for extended life and with-stands temperatures up to 3000° F.
- Rugged steel skids are standard on all models for ease of handling and installation.

Bio-security Protects Your Farm:

- Burning destroys the spread of diseases.
- Burning keeps rendering trucks off your property.
- Burn Mizer™ meets or exceeds EPA guidelines.

Burn Mizer™ Is Simple and Clean To Use:

- Unit is completely automatic– load, set timer, leave.
- Burning is the fastest and easiest way to dispose of carcasses.
- 100 lbs. of carcass reduces to approximately 1 gallon of ash for easy clean-up.
- Burn Mizer™ has no unpleasant odors or smoke when operated properly.

Burn Mizer™ Burning Recommendations:

- A complete burn should consist of loading material into tank, programming control time based on 1 hour per 100lbs, plus an extra ½ hour. If using an afterburner, it must be running ½ longer than main cremator. After cycle is complete, 20%-30% of material should remain in tank, which should be left in to be used during next burn cycle. This utilizes the best efficiency of the cremator. Clean ashes out between each use.
- If grates are used, be sure to periodically change their location, rotating position to extend the life of each one. If one grate is always at the burner, it will deteriorate quicker than the others, and can deform.
- Normal wear items: grates, oil nozzles.
- Hatchery waste cremator has a special refractory liner. This unit features the burner mounted at a higher location and does not include an ash door. It is exclusively a 8430 model, with a 230 VAC 50HZ gas burner.

©2026 Valco Industries, Inc.

Cremator Setup

Whether you are installing an OIL BURNER or a GAS BURNER, the cremator set up, stack assemblies and burner mounting are the same. Therefore these setups and assemblies will be handled in this manual first then you will be given specific installation instruction for each burner type, OIL BURNER or GAS BURNER. The instructions for the OIL and GAS burner hookups will be separated along with their parts lists and troubleshooting information to avoid any confusion.
VAL-CO® recommends that cremators are installed in accordance with local codes and ordinances. If on-site testing is required, it is the responsibility of the purchaser and can be arranged through VAL-CO®.

OUTSIDE INSTALLATION IS HIGHLY RECOMMENDED.
VAL-CO® must be advised before an inside installation is performed.

Should you decide to install the cremator inside, there are special requirements that MUST be maintained. One being that the cremator room has sufficient ventilation to provide the necessary combustion air for the burner fuel, the waste material and any other appliance that would draw its air from the same enclosed area. Room size, chimney height, placement, and possibly special insurance are additional requirements.

VAL-CO® is not liable for injury or damage to person(s), property or any incidental or consequential damages.

WARNING: Under no condition should the access to outside air be so restricted that the maximum possible use of combustion air is inhibited. Pay particular attention to exhaust fans that could draw air from the area and create a negative pressure in the room.

Cremator Set-Up for either Oil or Gas Burner

1. Place cremator on a solid base, concrete or gravel.
2. Keep this site free of all vegetation.
3. Consult fuel section for recommendations of fuel supply distance.
4. Combustibles should not be closer than 6 feet (1.83 meters) to the main chamber at any time.
5. All components are shipped inside the unit. Remove contents from inside the cremator.
6. All cremators use an electronic control and all secondary burners use a mechanical timer/control.
7. An extra piece of insulation is shipped with every cremator and is to be placed in the open area between the end plate and exhaust stack inside of the top of the cremator.

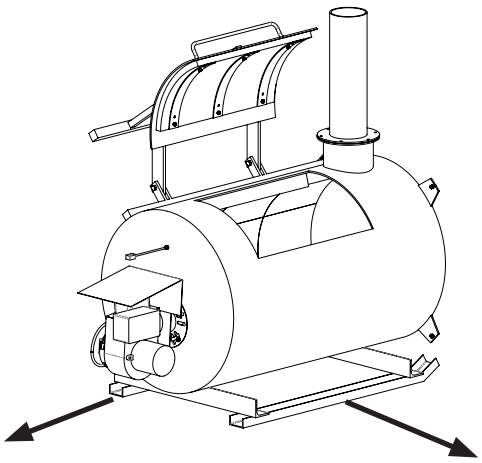

6 Ft CLEARANCE

It is imperative that you place the Cremator on SOLID AND LEVEL CONCRETE OR GRAVEL!

©2026 Valco Industries, Inc.

Exhaust Stack or Secondary Assembly

Exhaust Stack or Secondary Burner Assembly - (Oil or Gas Burners)

1. Mount the exhaust stack and/or secondary burner, to the main chamber with 1-1/4” Bolts and Nuts to secure flanges (as shown in stages with Figures 1, 2, 3, & 4 below).

Figure 1

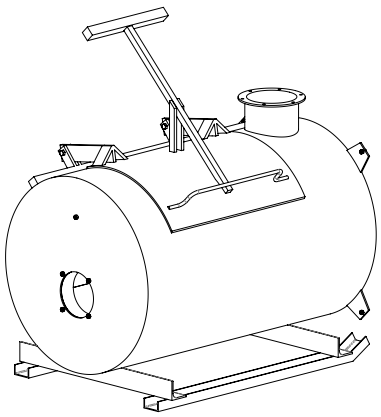

Figure 2

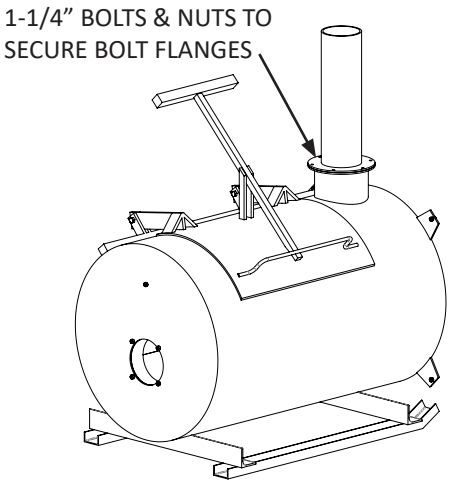

Figure 3 – MODEL 12

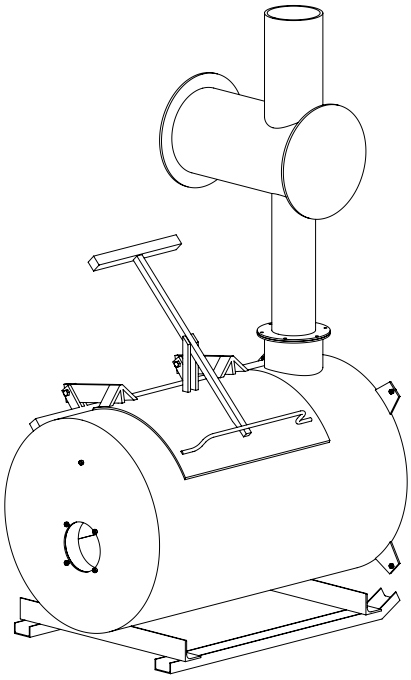

Figure 4 – MODEL 20

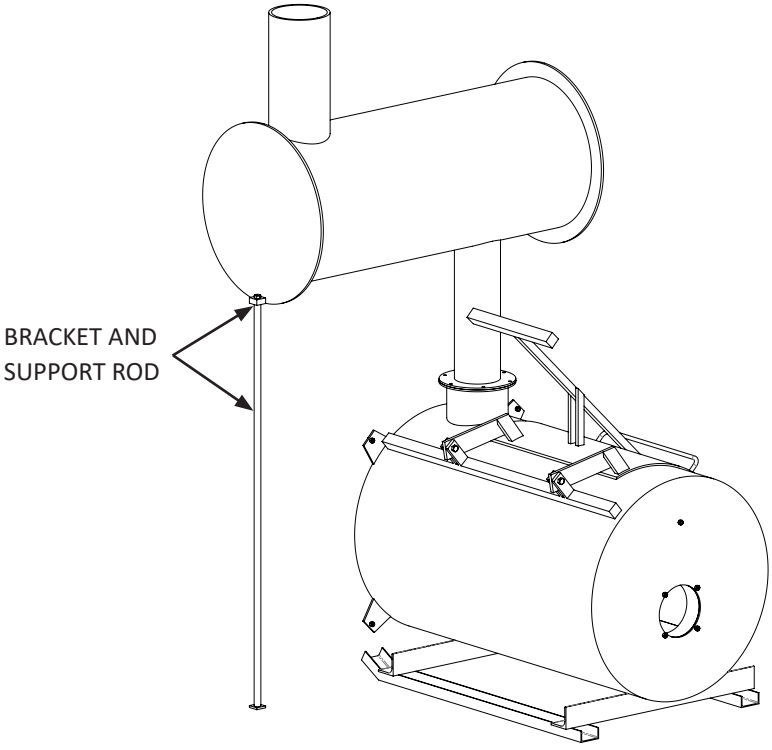

2. If a model 20 secondary burner unit is being installed, place the support rod into the bracket (as shown in Figure 4 above) before mounting secondary burner on the main chamber.
3. Secondary burner placement must be set at a right angle to the main chamber.
4. Mount the secondary burner unit by securing the bolt flanges with 1-1/4” bolts & nuts.
5. Adjust the support rod so that the secondary burner is level (model 20 secondary burner only), tighten all bolts securely.

©2026 Valco Industries, Inc.

Cremator & Afterburner Sizes

MODEL #	FLANGE HEIGHT
30”	38.5”
36”	45”
42”	51”
52”	61”

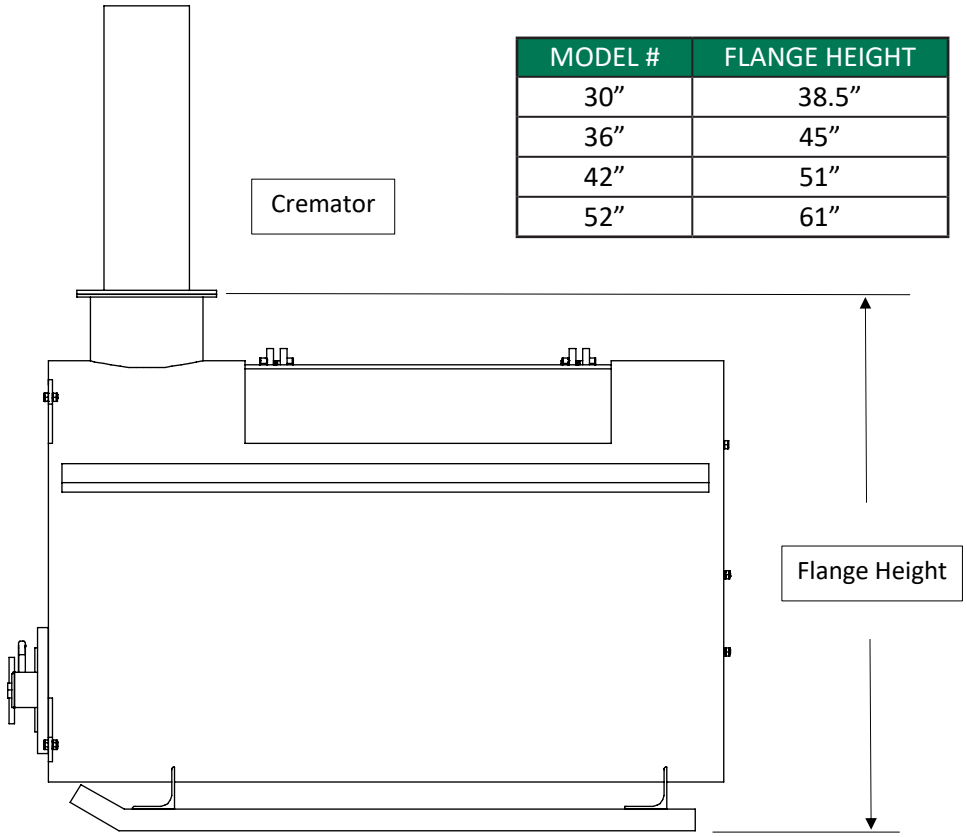

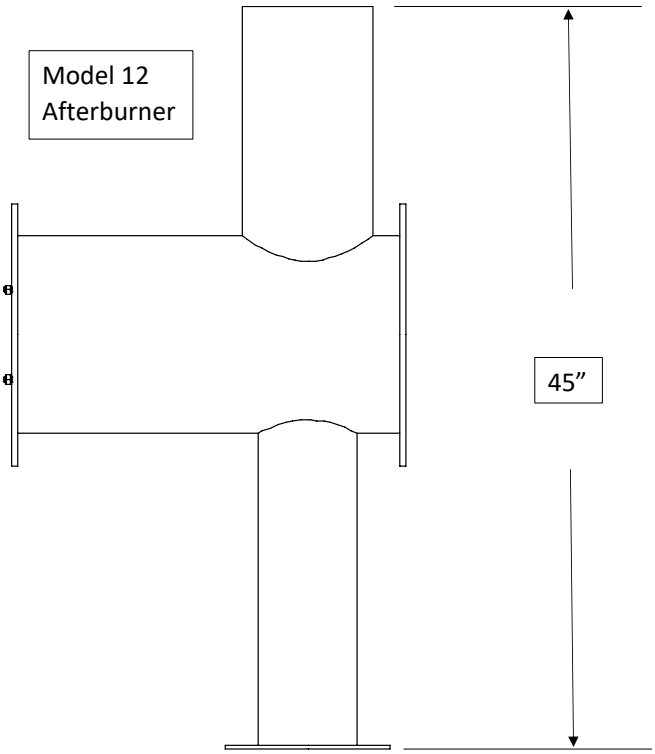

©2026 Valco Industries, Inc.

Cremator & Afterburner Sizes - continued

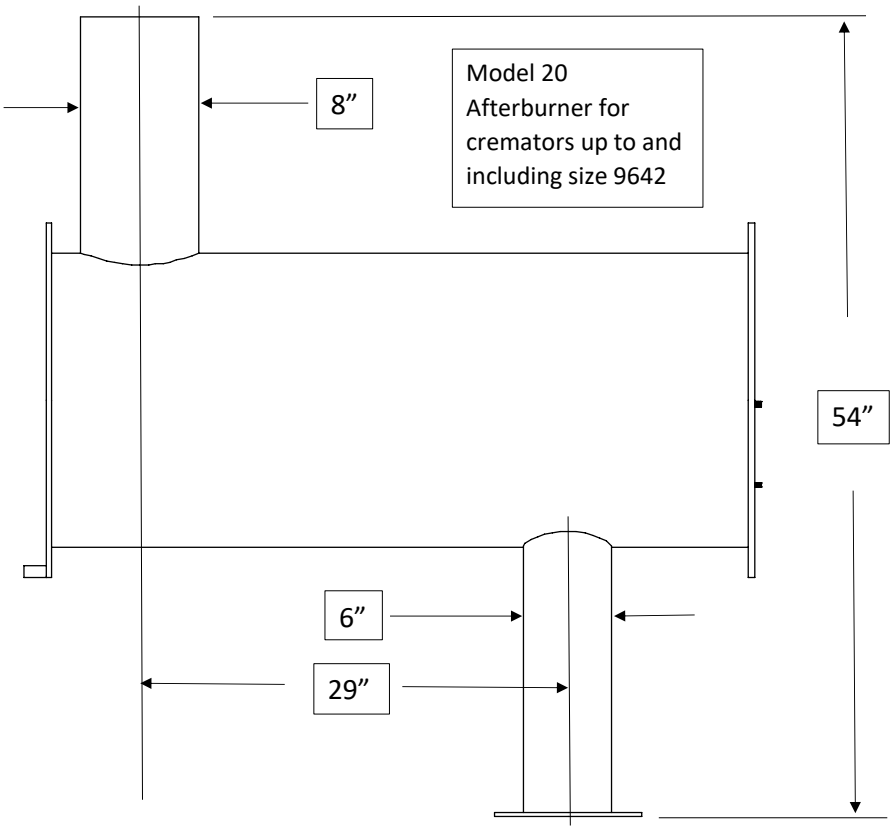

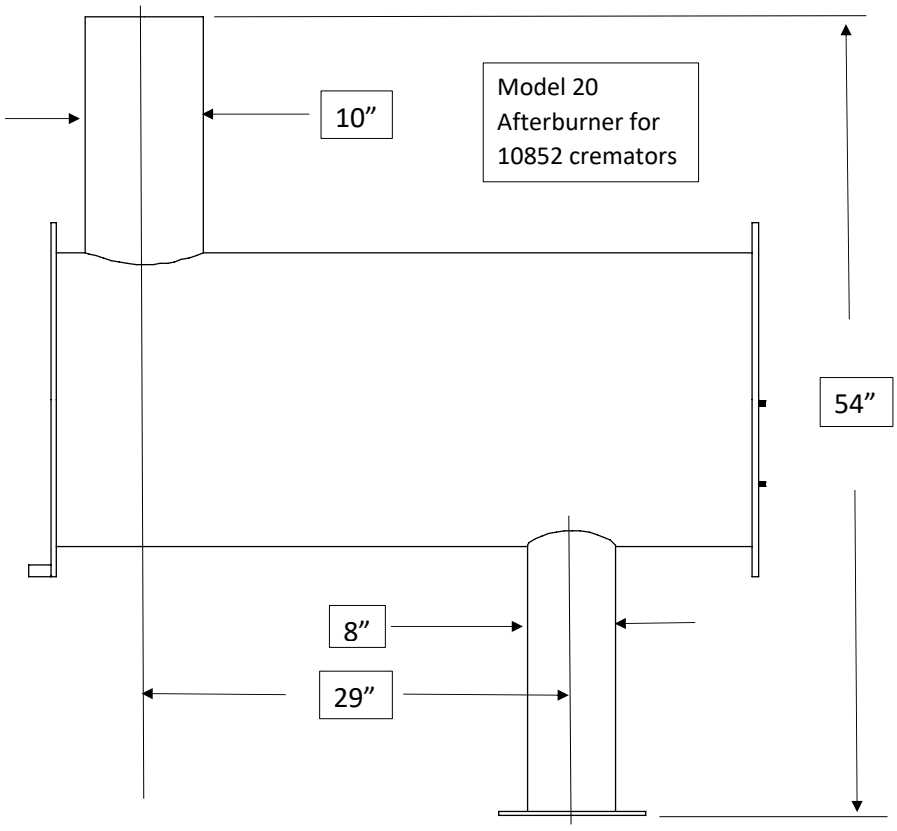

©2026 Valco Industries, Inc.

Mounting Burners

Mounting Burners - (Oil or Gas Burners)

The Oil and Gas burners mount the same way. Each has a flange with holes (slots) which will align with the studs on the cremator end and also on both the Afterburner units, model 12 and 20 (follow the steps below).

1. Locate the main burner unit (with digital controller & yellow probe wire) and if applicable, the secondary burner unit (with turn knob timer).
2. Remove the four 3/8” nuts & washers from the studs on the burner end plates of the cremator and secondary burner.
3. Mount the main and secondary burner units onto the four studs that protrude from each unit using the slotted holes on the burner flanges (as shown in Figures 7 & 8). Please note than the flanges are welded at an angle so that the flame points downward slightly.
4. Tighten all bolts securely

Figure 5 – OIL BURNER

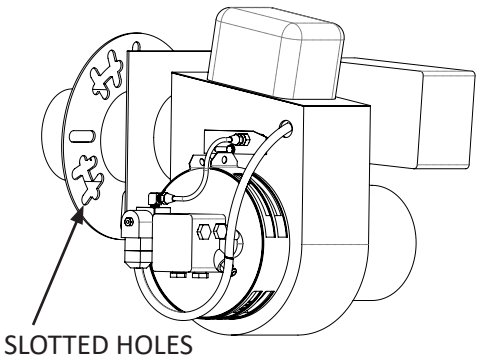

Figure 6 – GAS BURNER

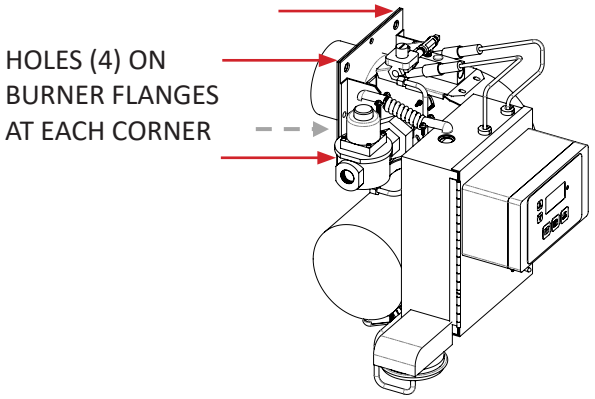

Figure 7 – MODEL 12 BEFORE Burners are attached

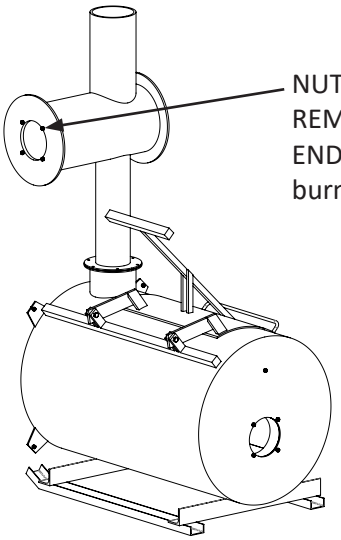

Figure 8 – MODEL 20 WITH Burner as exampled:

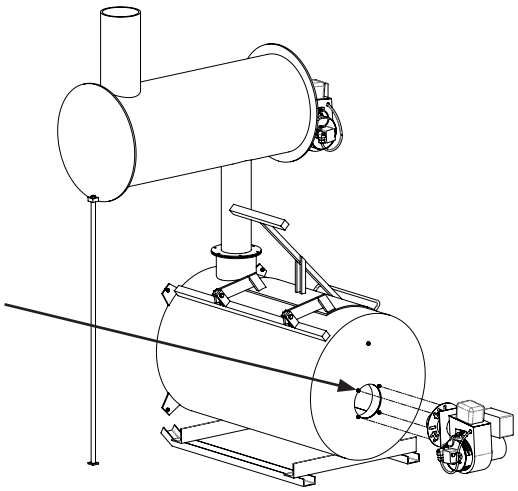

MOUNTING BURNERS
Note when you are mounting the burner units (as explained on the next page) that the flanges on the burner units are welded at an angle so the flame points downward.
The main burner will have a digital controller – the secondary burner will use a turn knob timer.

©2026 Valco Industries, Inc.

Sensor Installation

Sensor - Heat Probe - (Oil or Gas Burner)

Installing the Sensor or Heat Probe is the same for either the OIL BURNER OR GAS BURNER.

1. Remove the “O” ring on the heat probe. The “O” ring is used for shipping purposes only to keep the fitting on the probe during shipment.
2. Then place the heat probe into the pipe fitting (above the burner). Insert probe into the burning chamber 2-3 inches (look inside burning chamber).
3. Tighten compression fitting using only your fingers, but do not over-tighten.
4. Attach the cable connected to the Sensor or (Heat Probe) to the yellow probe wire from the control. (This is a male/female connection.)

Figure 9

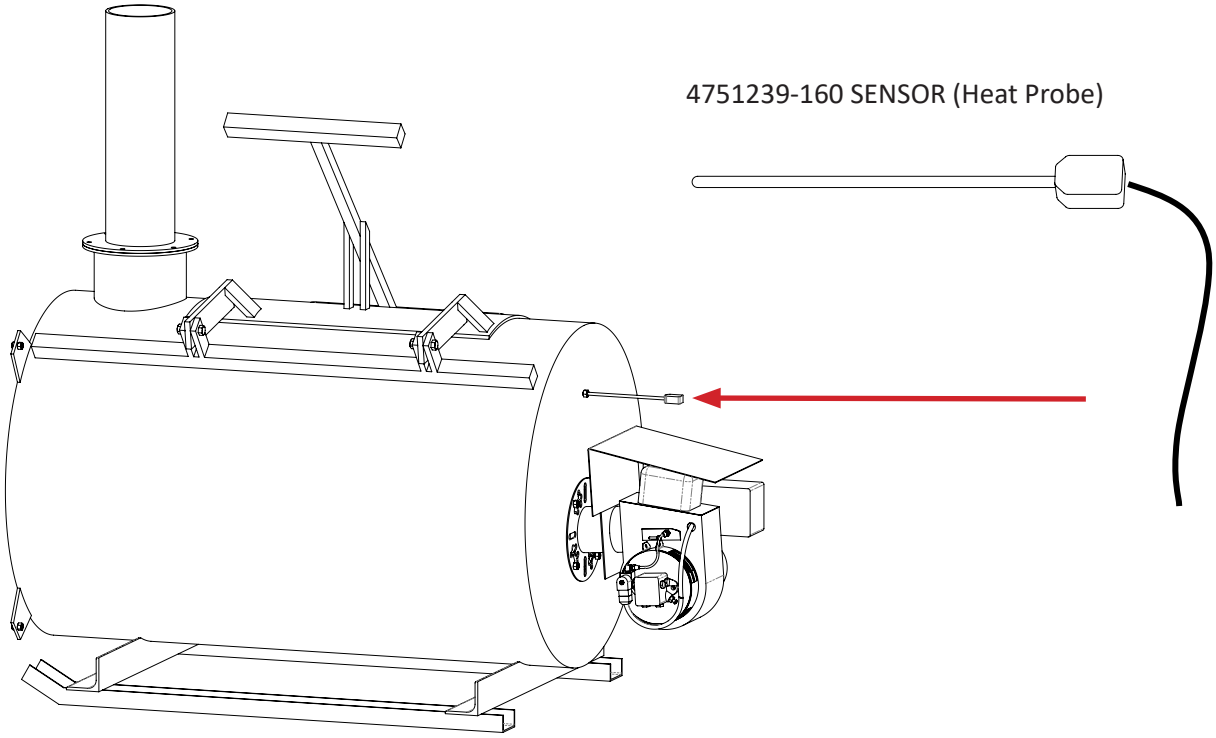

©2026 Valco Industries, Inc.

Oil Burner Installation (Specific to Oil Burner ONLY)

This section of the manual will give direction to OIL BURNER installation only!

Now that you have the oil burner(s) attached to the cremator, you are ready to set the fuel tank in place and hook up the fuel line. **Your local area dealer can help you with the fuel line installation. Oil burners operate on #2 diesel fuel or #2 heating oil.**

Oil Burner - Fuel Line Set-Up

1. Set the fuel tank a minimum of 8 feet away from unit. The maximum distance is 25 feet.
2. Check your area for your local code.
3. If your application calls for a distance farther than 25 feet, call the factory. It is recommended to install an oil filter (owner must supply).

Figure 10 – OVERVIEW OF BURN MIZER ™CREMATOR & FUEL TANK WITH OIL BURNER.

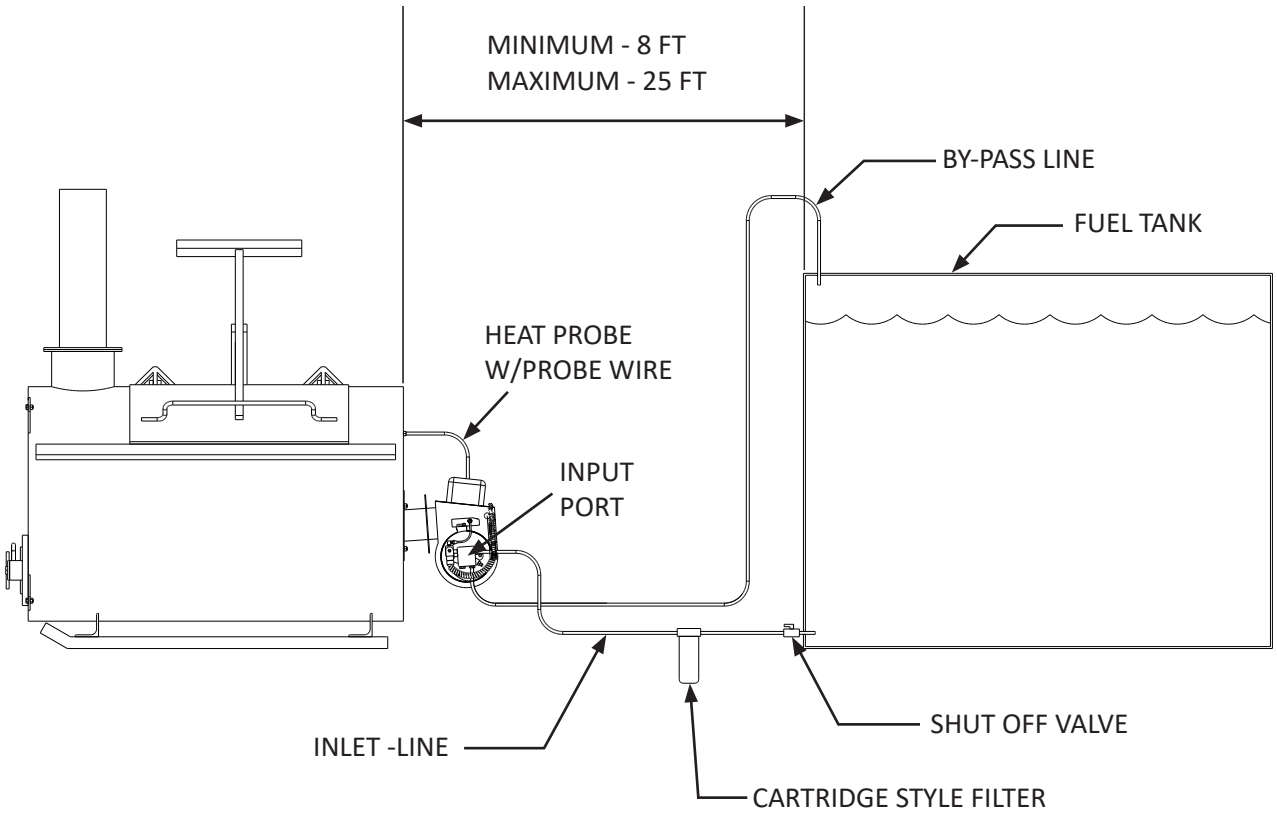

IMPORTANT!
Consult your local area for code on distance to place fuel tank.

©2026 Valco Industries, Inc.

Oil Burner - Plumbing

If you are **not** installing an OIL BURNER and are installing a Gas Burner GO TO GAS BURNER (SPECIFIC) INSTALLATION (See page 26 for Gas Burner Installation)

This section of the manual will give direction to OIL BURNER installation only!

Failure to follow instructions exactly may result in causing property damage, personal injury or death.
Local area fuel dealer can assist with the fuel line installation.
REFER TO THE OIL BURNER MANUAL FOR MORE DETAIL.

1. When installing plumbing for OIL Burners, only use 3/8” ID copper lines.
2. The fuel pump comes with a plastic bag on it. Remove this bag.
3. The fuel can be directed either of two ways. We recommend that you do the following: Inside the plastic bag you will find a 1/16” (threaded) plug which is the By-Pass Plug. You will need to remove and discard the “Return” Port Plug (which causes the excess fuel to be directed back into the burner), from the By-Pass Port of the fuel pump, (as pictured below). Now insert the smaller 1/16” By-Pass Plug inside of the By-Pass-Port (which prevents the fuel from being directed back to the burner and allows the fuel to be directed out through the By-pass port).

Figure 11 – OIL BURNER

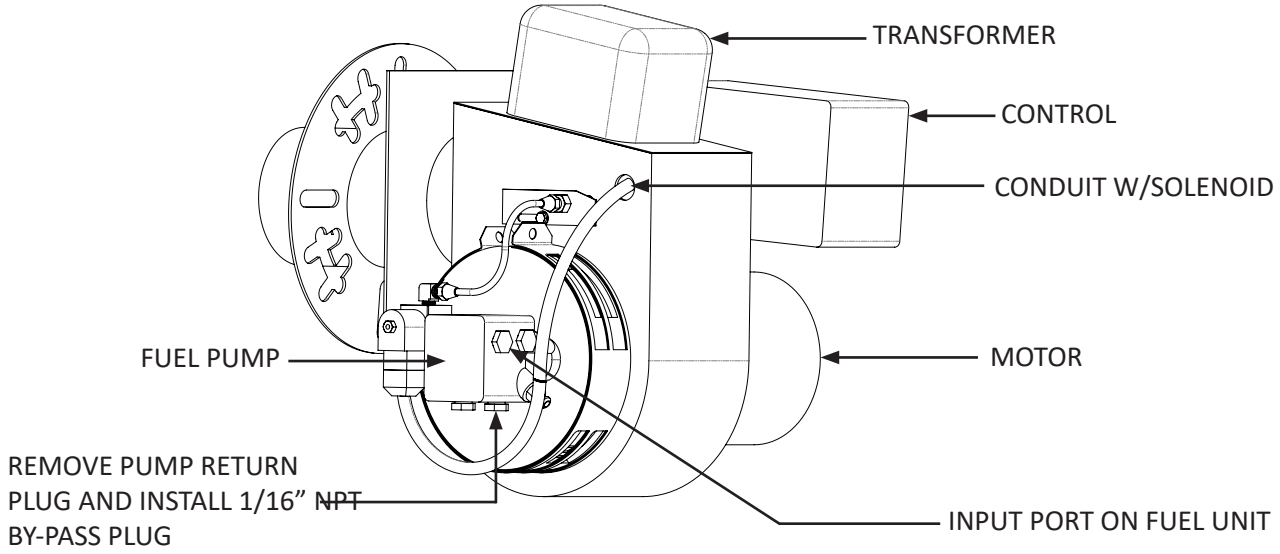

4. Using a 5/32” Allen wrench, place the Allen head screw into the return port.
5. Plumb the return line (3/8” ID copper) from this port back to the top of the fuel tank (as shown on next page Figure 12).
6. Do not block or restrict the port once the Allen head screw is inserted.
7. We are using a 2-pipe system (see the blue sheet included with the Allen head screw).

©2026 Valco Industries, Inc.

IMPORTANT!
If port is restricted, the pump will fail.

8. Plumb a fuel feed line (input) from the bottom of the fuel tank to the “input” port on the fuel unit.
9. Place the line into the inlet port of the pump.

Figure 12 - OIL BURNER

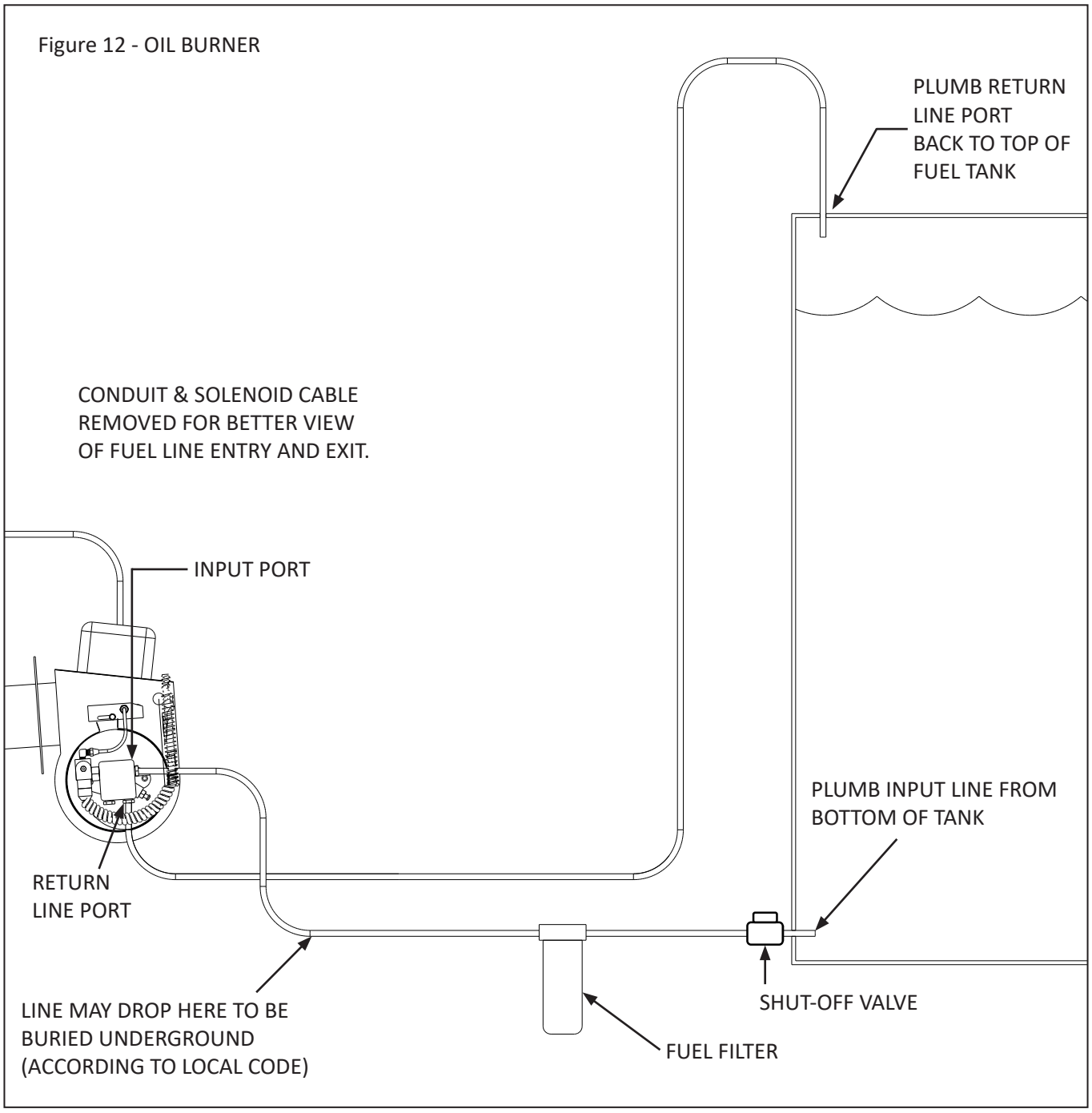

©2026 Valco Industries, Inc.

Oil Burner - Digital Control with Terminal Strip Wiring Diagram

115 VOLT AC

WARNING! Electrical wiring must be done by a qualified Electrician!

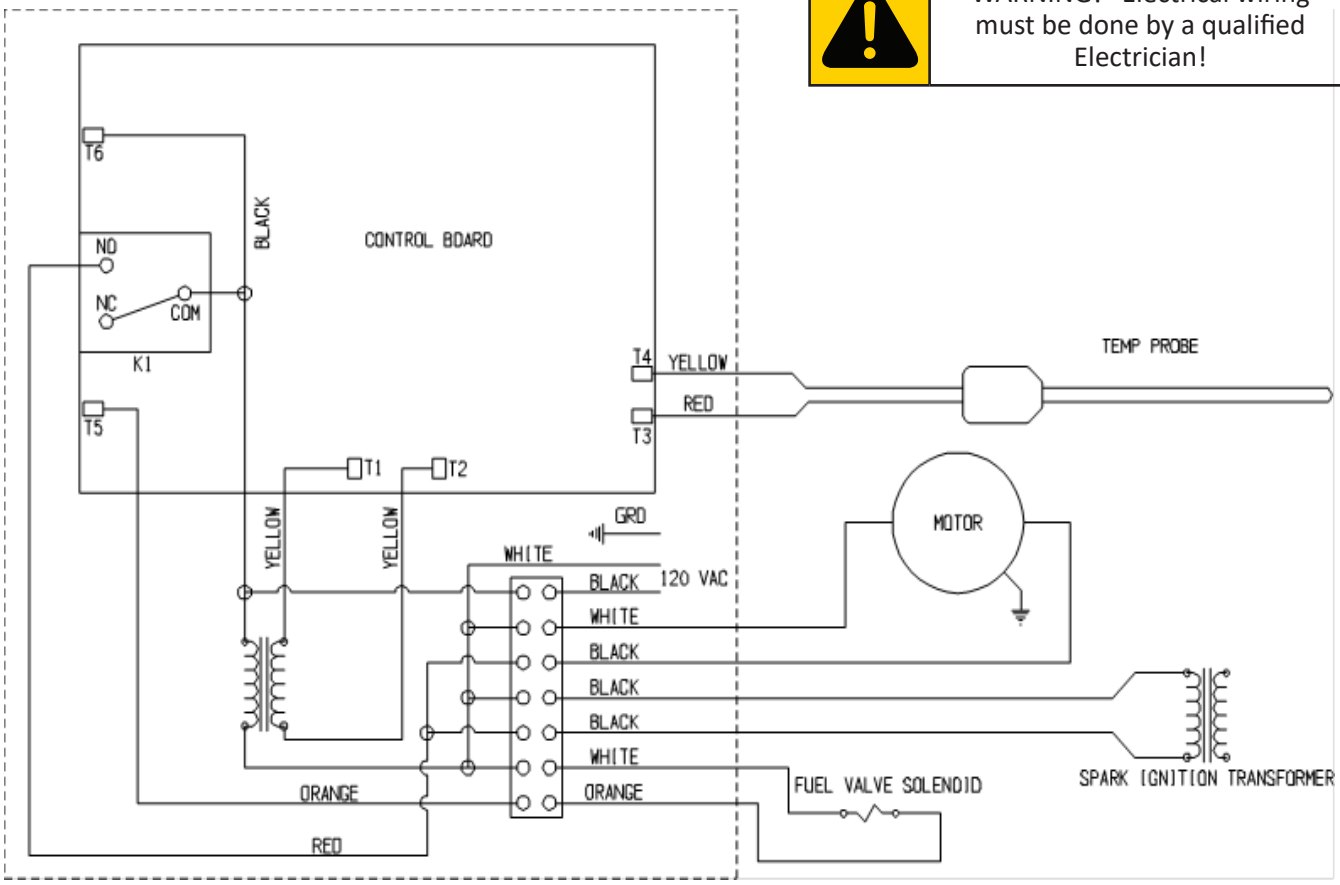

230 VOLT AC

DANGER

ELECTRICAL HAZARD!

Disconnect power before servicing equipment.

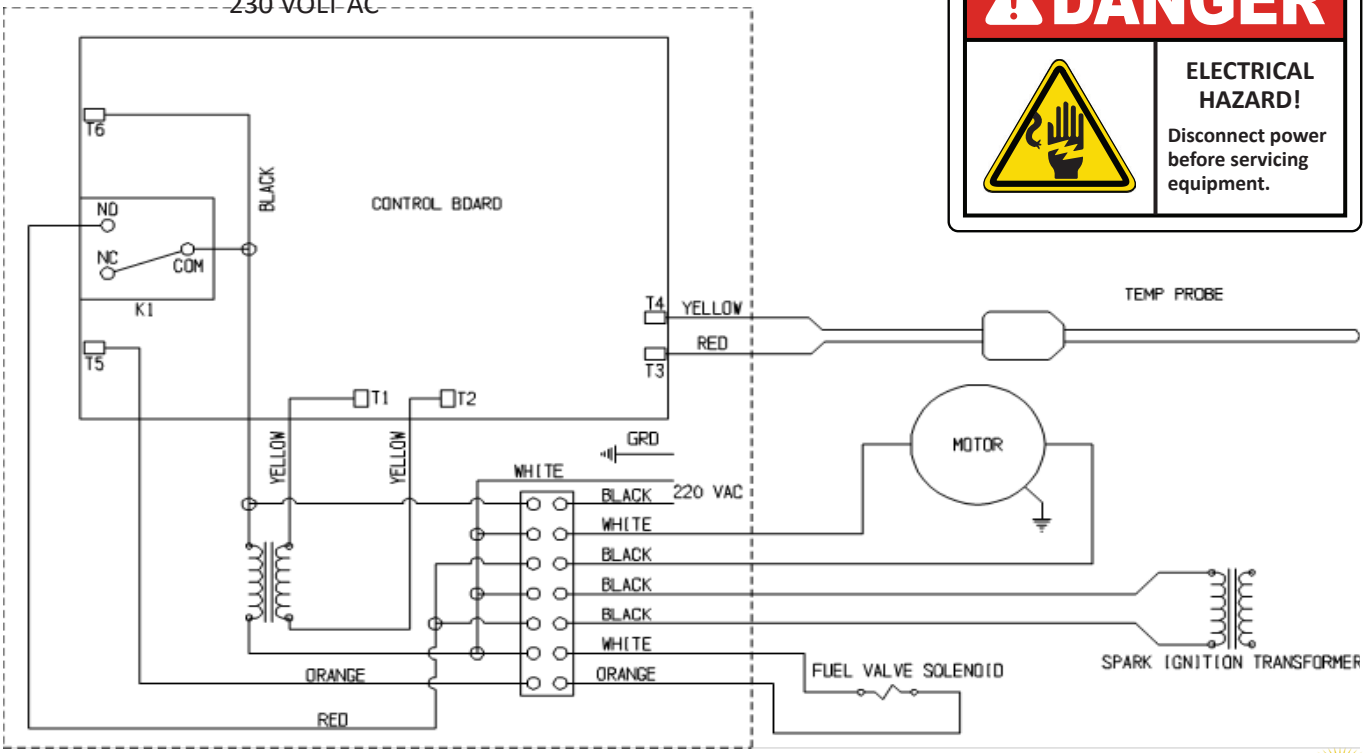

©2026 Valco Industries, Inc.

Oil Burner - Electronic Control Wiring Diagram

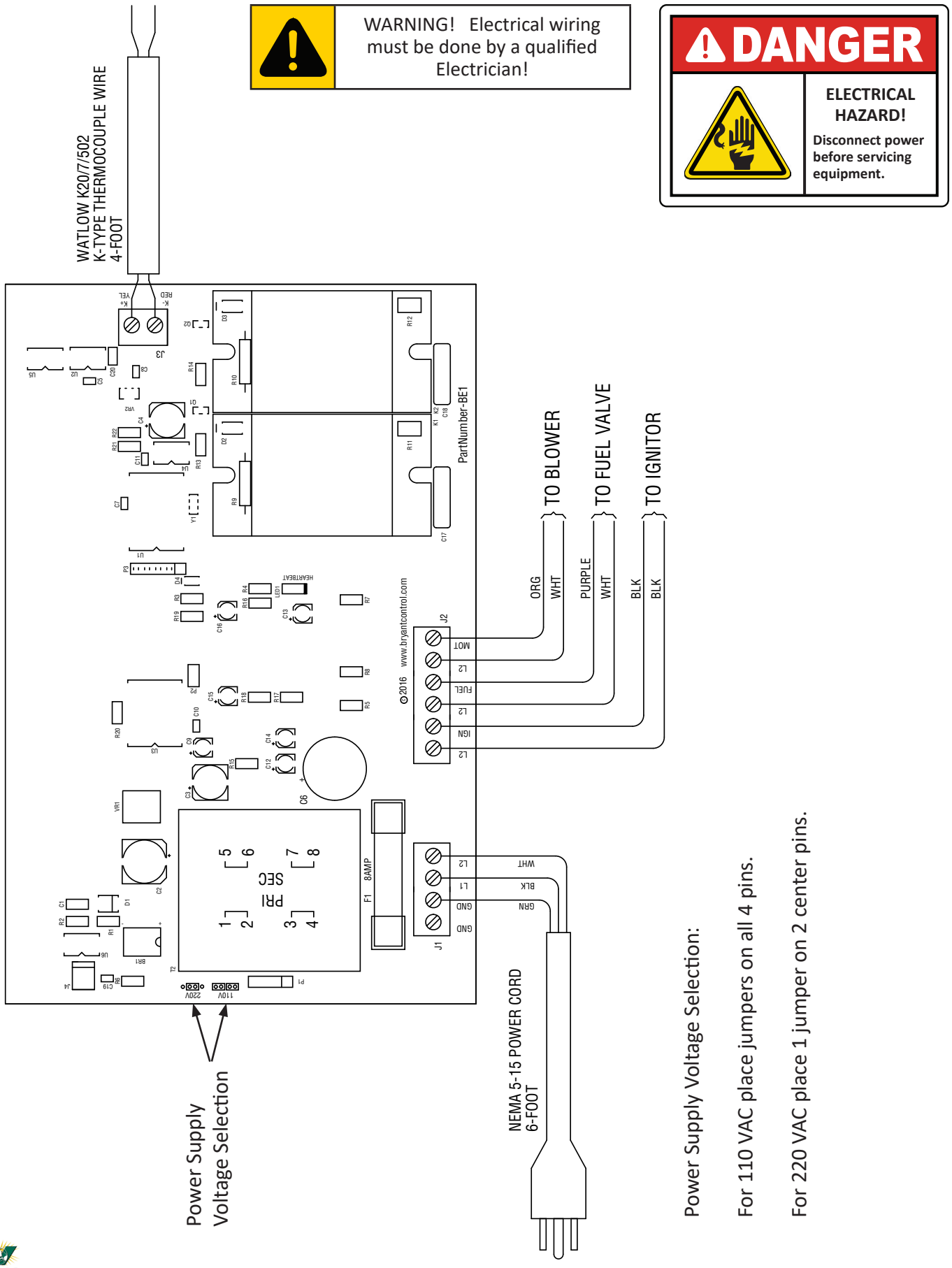

©2026 Valco Industries, Inc.

Oil Burner - Power and Rain Shield Installation

1. Plug in the attached power cord into the proper voltage outlet.
2. A 20-amp service is recommended. (12 gauge wire)
3. Install the rain shield by bolting the shield to the square flange between the chamber and burner transformer as shown in figure 13 below. (Rain Shield is provided with the bolt and nut attached.)

Figure 13 - OIL BURNER

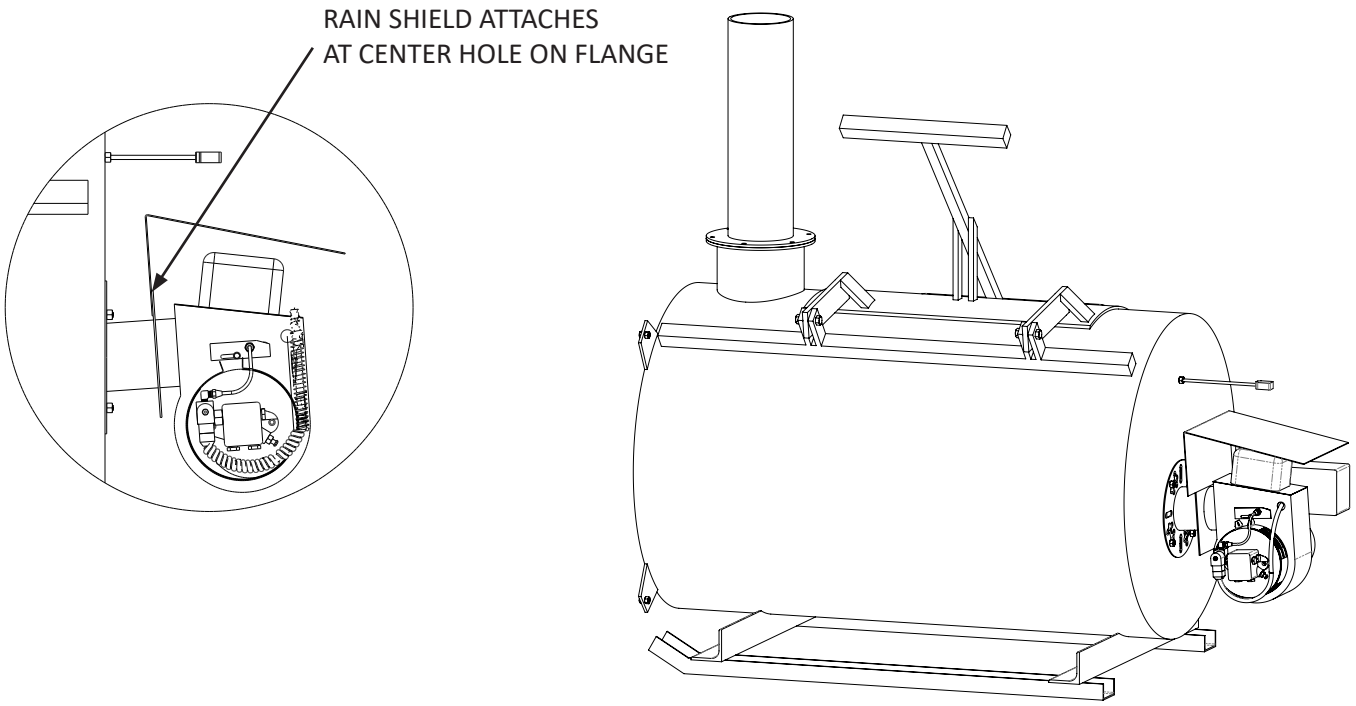

Testing the Burner

Run a burner test before loading the cremator with a carcass.



The Unit will SELF PRIME if the return line is installed on an Oil Burner.
(REFER TO BURNER MANUAL INCLUDED WITH YOUR BURNER.)

©2026 Valco Industries, Inc.

Operation of Burn Mizer™ Cremator Digital Control (For Oil or Gas Burner Units)

Operation

Load crematory with carcass
ONLY AFTER THE BURNER UNIT HAS PASSED TESTING!

1. Do not over load (no more than ¾ full).
2. Do not place carcass within 12 inches of the burner head.

Set auto timer for 1 hour per 100 pounds plus an extra ½ hour.

1. Press Start button once.
2. Press and hold the Set Time button and the △ button to increase time or the ▽ button to decrease time.

Figure 14

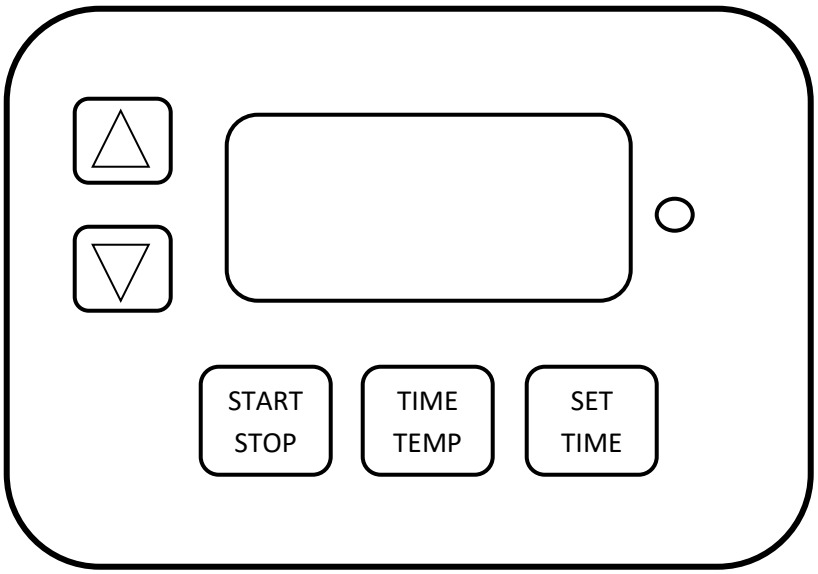

3. Start burner units.
4. After unit starts, close the charge door.
5. Make sure burner is firing before leaving unit.
6. NEVER OPEN CHARGE DOOR WITH UNIT BURNING.
7. NEVER CHARGE A HOT UNIT.
8. Clean out ash after burning or before reloading unit. Too much ash will affect the performance of the unit. A high ash level can result in main burner damage.
9. If using secondary burner unit, always start secondary burner before starting main burner unit (some states require 20 minutes). Secondary burner unit must run when main chamber is running. Always run secondary burner unit for an additional 30 minutes.
10. For example, run-time of 2 hours for main burner = 2 hours 30 minutes run time for secondary burner.

The Unit will SELF PRIME if the return line is installed on an Oil Burner.
(Refer to Trouble shooting on page 23 & 24 if you are experiencing problems.)

©2026 Valco Industries, Inc.

Operation of Burn Mizer™ Cremator Electronic Control (For Oil or Gas Burner Units)

Operation

Load crematory with carcass
ONLY AFTER THE BURNER UNIT HAS PASSED TESTING!

1. Do not over load (no more than ¾ full).
2. Do not place carcass within 12 inches of the burner head.

Set auto timer for 1 hour per 100 pounds plus an extra ½ hour.

1. Press Power Button once to power up control.
2. Press Power Button a second time to set the burn time.

Figure 14

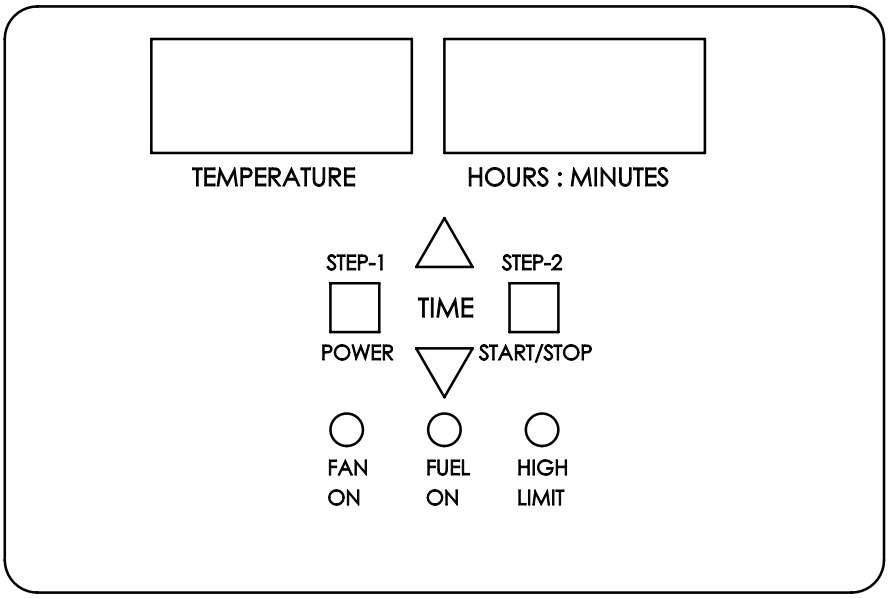

3. Press Up △ or Down ▽ Buttons to select the burn time.
4. Press Start/Stop Button once to start the burn operation.
5. Press Start/Stop Button a second time to stop the burn operation
6. Press Start/Stop Button a third time to turn control off.
7. After unit starts, close the charge door.
8. Make sure burner is firing before leaving unit.
9. NEVER OPEN CHARGE DOOR WITH UNIT BURNING.
10. NEVER CHARGE A HOT UNIT.
11. Clean out ash after burning or before reloading unit. Too much ash will affect the performance of the unit. A high ash level can result in main burner damage.
12. If using secondary burner unit, always start secondary burner before starting main burner unit (some states require 20 minutes). Secondary burner unit must run when main chamber is running. Always run secondary burner unit for an additional 30 minutes.
13. For example, run-time of 2 hours for main burner = 2 hours 30 minutes run time for secondary burner.

The Unit will SELF PRIME if the return line is installed on an Oil Burner.
(Refer to Trouble shooting on page 23 & 24 if you are experiencing problems.)

©2026 Valco Industries, Inc.

Oil Burner - Exploded Drawing and Parts List

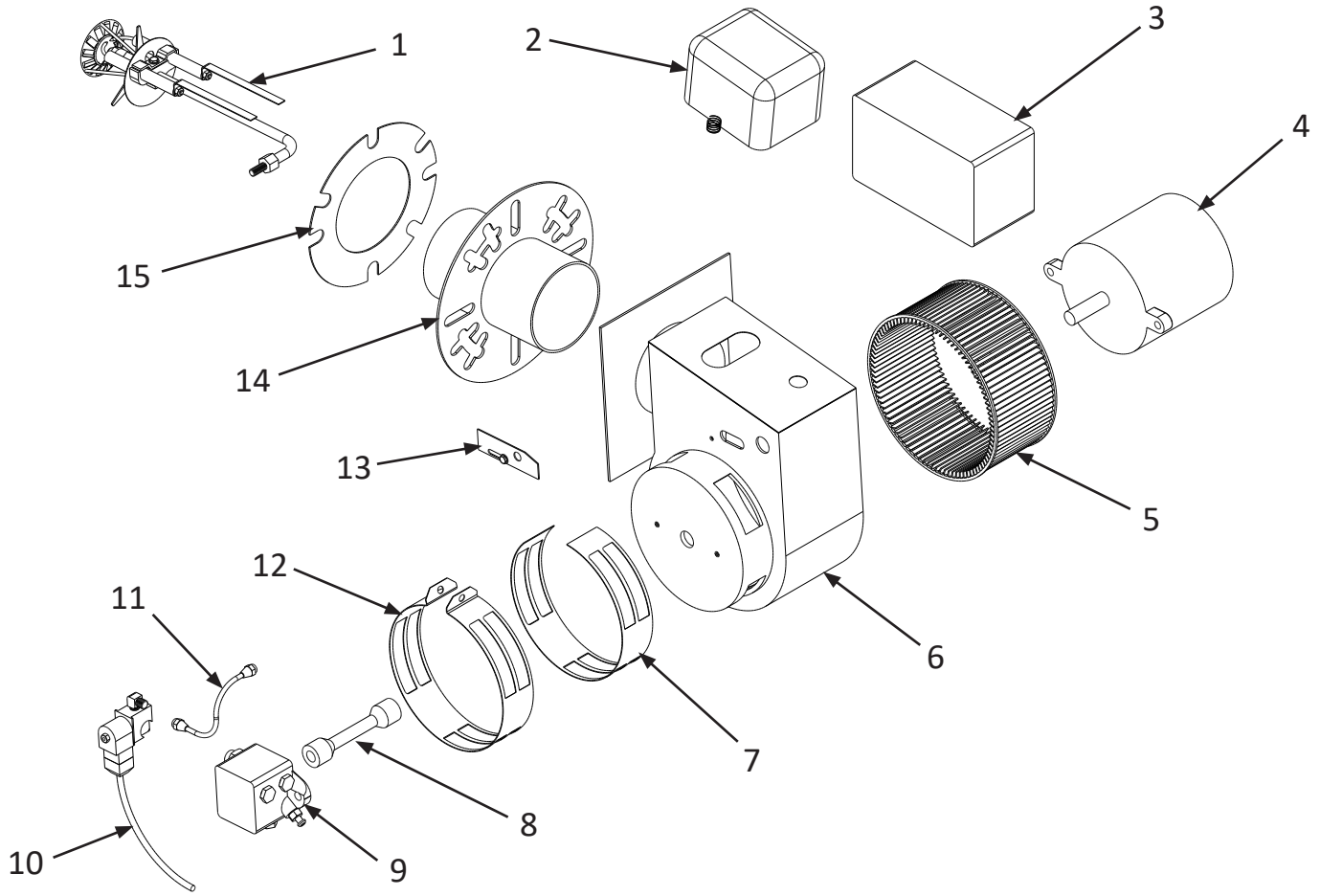

KEY #	PART #	DESCRIPTION	QTY
1	4751213	GUN ASSEMBLY	1
2	4751205	120V, 60HZ, TRANSFORMER	1
2	4751252	230V, 50HZ, TRANSFORMER	1
2	4751252-60	230V, 60HZ, TRANSFORMER	1
3	475339	ELECTRONIC CONTROL	1
4	4751201	120V, 60HZ, MOTOR	1
4	4751251	230V, 50HZ OR 60HZ MOTOR	1
5	4751203	FAN	1
6	4751204	HOUSING	1
7	4751207	INNER AIR BAND	1
8	4751209	DRIVE COUPLER	1
9	4751211	FUEL PUMP, 60HZ	1
9	4751211-60	FUEL PUMP, 220V, 60HZ	1
9	4751253	FUEL PUMP, 50HZ	1
10	4751237	FUEL VALVE, 120V, 50/60HZ	1
10	4751254	FUEL VALVE, 230V, 50/60HZ	1
11	4751210	OIL LINE ASSEMBLY	1
12	4751208	OUTER AIR BAND	1
13	4751235	SLOT COVER PLATE	1
14	4751230	AIR TUBE ASSEMBLY	1
15	4751216	GASKET	1

©2026 Valco Industries, Inc.

Oil Burner - Replacement Parts List

PART #	DESCRIPTION		QTY
475300	BURNER, CREMATOR, MECH CTRL	OIL, 120V, 60HZ, MODEL 12	1
475301	BURNER, CREMATOR, MECH CTRL	OIL, 220V, 50HZ, MODEL 12	1
475302	BURNER, CREMATOR, MECH CTRL	OIL, 220V, 60HZ, MODEL 12	1
475303	BURNER, CREMATOR, MECH CTRL	OIL, 120V, 60HZ, MODEL 20	1
475304	BURNER, CREMATOR, MECH CTRL	OIL, 220V, 50HZ, MODEL 20	1
475305	BURNER, CREMATOR, MECH CTRL	OIL, 220V, 60HZ, MODEL 20	1
475306	BURNER, CREMATOR, MECH CTRL	OIL, 120V, 60HZ, MODEL 4820	1
475307	BURNER, CREMATOR, MECH CTRL	OIL, 220V, 50HZ, MODEL 4820	1
475308	BURNER, CREMATOR, MECH CTRL	OIL, 220V, 60HZ, MODEL 4820	1
475309	BURNER, CREMATOR, ELEC CTRL	OIL, 120V, 60HZ, MODEL 4830	1
475310	BURNER, CREMATOR, ELEC CTRL	OIL, 220V, 50HZ, MODEL 4830	1
475311	BURNER, CREMATOR, ELEC CTRL	OIL, 220V, 60HZ, MODEL 4830	1
475312	BURNER, CREMATOR, NO CTRL	OIL, 120V, 60HZ, MODEL 4830	1
475313	BURNER, CREMATOR, NO CTRL	OIL, 220V, 50HZ, MODEL 4830	1
475314	BURNER, CREMATOR, NO CTRL	OIL, 220V, 60HZ, MODEL 4830	1
475315	BURNER, CREMATOR, ELEC CTRL	OIL, 120V, 60HZ, MDL 7230/8430	1
475316	BURNER, CREMATOR, ELEC CTRL	OIL, 220V, 50HZ, MDL 7230/8430	1
475317	BURNER, CREMATOR, ELEC CTRL	OIL, 220V, 60HZ, MDL 7230/8430	1
475318	BURNER, CREMATOR, NO CTRL	OIL, 120V, 60HZ, MODEL 7230/8430	1
475319	BURNER, CREMATOR, NO CTRL	OIL, 220V, 50HZ, MODEL 7230/8430	1
475320	BURNER, CREMATOR, NO CTRL	OIL, 220V, 60HZ, MODEL 7230/8430	1
475321	BURNER, CREMATOR, ELEC CTRL	OIL, 120V, 60HZ, MODEL 8436	1
475322	BURNER, CREMATOR, ELEC CTRL	OIL, 220V, 50HZ, MODEL 8436	1
475323	BURNER, CREMATOR, ELEC CTRL	OIL, 220V, 60HZ, MODEL 8436	1
475324	BURNER, CREMATOR, NO CTRL	OIL, 120V, 60HZ, MODEL 8436	1
475325	BURNER, CREMATOR, NO CTRL	OIL, 220V, 50HZ, MODEL 8436	1
475326	BURNER, CREMATOR, NO CTRL	OIL, 220V, 60HZ, MODEL 8436	1
475327	BURNER, CREMATOR, ELEC CTRL	OIL, 120V, 60HZ, MODEL 9642	1
475328	BURNER, CREMATOR, ELEC CTRL	OIL, 220V, 50HZ, MODEL 9642	1
475329	BURNER, CREMATOR, ELEC CTRL	OIL, 220V, 60HZ, MODEL 9642	1
475330	BURNER, CREMATOR, NO CTRL	OIL, 120V, 60HZ, MODEL 9642	1
475331	BURNER, CREMATOR, NO CTRL	OIL, 220V, 50HZ, MODEL 9642	1
475332	BURNER, CREMATOR, NO CTRL	OIL, 220V, 60HZ, MODEL 9642	1
475333	BURNER, CREMATOR, ELEC CTRL	OIL, 120V, 60HZ, MODEL 10852	1
475334	BURNER, CREMATOR, ELEC CTRL	OIL, 220V, 50HZ, MODEL 10852	1
475335	BURNER, CREMATOR, ELEC CTRL	OIL, 220V, 60HZ, MODEL 10852	1
475336	BURNER, CREMATOR, NO CTRL	OIL, 120V, 60HZ, MODEL 10852	1
475337	BURNER, CREMATOR, NO CTRL	OIL, 220V, 50HZ, MODEL 10852	1
475338	BURNER, CREMATOR, NO CTRL	OIL, 220V, 60HZ, MODEL 10852	1

©2026 Valco Industries, Inc.

Oil Burner - Gun Assembly (4751213) Replacement Parts List

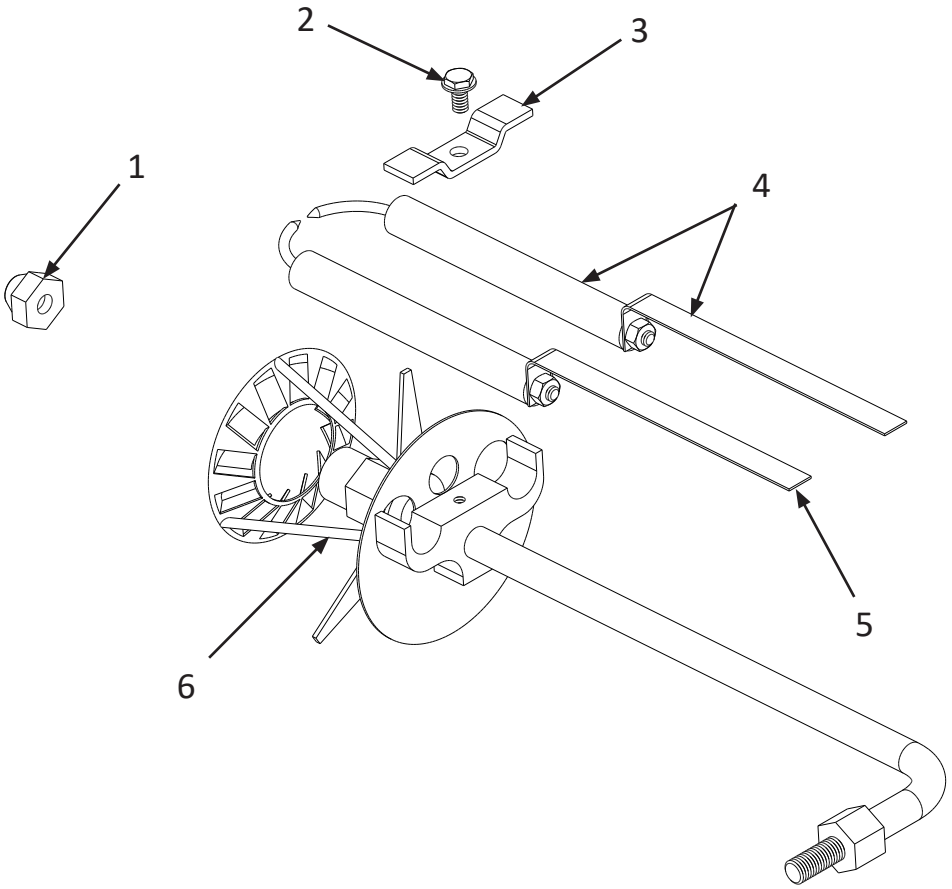

KEY #	PART #	DESCRIPTION	QTY
1	4751001	1.20 GPH NOZZLE, MODEL 20	1
1	4751002	1.35 GPH NOZZLE, MODEL 4820/4830	1
1	4751003	2.50 GPH NOZZLE, MODEL 10852	1
1	4751005	1.10 GPH NOZZLE, MODEL 12	1
1	4751006	2.25 GPH NOZZLE, MODEL 9642	1
1	4751007	2.00 GPH NOZZLE, MODEL 8436	1
1	4751009	1.50 GPH NOZZLE, MODEL 7230/8430	1
2	NO NUMBER	#10-24 X 5/16" SLOTTED HEX HEAD BOLT ***(not sold as repair part)***	0
3	4751224	HOLD DOWN	1
4	4751226	ELECTRODE AND BUSS BAR ASSEMBLY	1
5	4751227	BUSS BAR ***ONLY***	1
6	NO NUMBER	FLAME LOCK ASSEMBLY ***(not sold as repair part)***	0

©2026 Valco Industries, Inc.

Oil Burner - Maintenance and Troubleshooting



IMPORTANT!
NEVER TOUCH ANY PART OF THIS UNIT WHILE IN OPERATION! SOME METAL PARTS CAN HAVE TEMPERATURES EXCEEDING 1500 DEGREES F. SERIOUS BURNS CAN RESULT IF UNPROTECTED SKIN COMES IN CONTACT WITH THESE PARTS. PLEASE BE SAFE.

Symptom	Diagnosis	Solution
OIL BURNER **Motor won't run**	Unit is unplugged	Plug into proper power source.
	Inadequate circuit breaker	20 Amp
	Reset is kicked	Push in red reset button on the outside of motor.
	Fuse on control board blown (electronic version)	Replace with 5 amp slow blow fuse.
	Controller board is not working properly	Consult dealer.
Poor or no fuel spray	Fuel level in tank	Check fuel supply.
	Dirty or worn nozzle	Replace nozzle after every 500 gallons of fuel.
	Air leaks in fuel lines or fittings	Repair cracked fittings or fuel lines.
	Air needs "bled" from lines	Use 3/8" wrench to loosen bleeder valve on pump. Burner must be running. Not required for burners using a return line.
	Improper or clogged fuel filter	Use canister type filter. Clean accordingly.
	Drive coupler is loose or broken	Tighten motor and fuel pump ends of drive coupler with 5/32" allen wrench.
	Failed fuel pump	Check all above areas first. Remove fuel valve using 9/16" wrench. Start unit. Watch for fuel where valve was removed. If fuel flows through the valve then the valve needs replaced. If no fuel flows through the valve then check your fuel tank.
	Failed valve	Be sure wiring harness is plugged into solenoid. If pump works and click can be heard but no fuel is seen, valve is bad.

©2026 Valco Industries, Inc.

Symptom	Diagnosis	Solution
No spark	Worn contact springs	Replace
	Transformer has failed or is weak	Replace
	Electrodes are dirty, cracked, or need adjusted	Clean brass buss bars with sand paper and grease remover. Replace any cracked electrodes. Adjust for 1/8” gap at tips above nozzle.
Cremator smokes	Improper air adjustment	Adjust air band for minimum air and no black smoke. (Adjust the air band while the unit is firing).
	Unit is overloaded	Air circulation inside unit is important. *See page 19.*
Control board reads “probe fail” message	Heat probe sensor is bad	Replace
	Yellow probe wire cracked	Replace
	Heat probe plug needs cleaned or replaced.	Replace
Burner Unit Vibrates	Fan is unbalanced	Check for ice or snow on fan.
		Check for rodents in fan.
		Check for bent fan.

The Burn Mizer cremator is a very durable and dependable unit. It does require some general maintenance to keep the unit running properly.

1. Keep fan intake screen clean at all times.
2. Any missing tile should be replaced immediately. Replacements can be shipped UPS and are relatively easy to repair. This would also include the blanket that is on the inside of the door.
3. Keep unit cleaned out. We recommend cleaning after each burn.



FOR MORE DETAIL ON TESTING SEE THE BURNER MANUAL INCLUDED WITH YOUR BURNER.

©2026 Valco Industries, Inc.

Digital Control Exploded & Replacement Parts List - (Oil or Gas Burner)

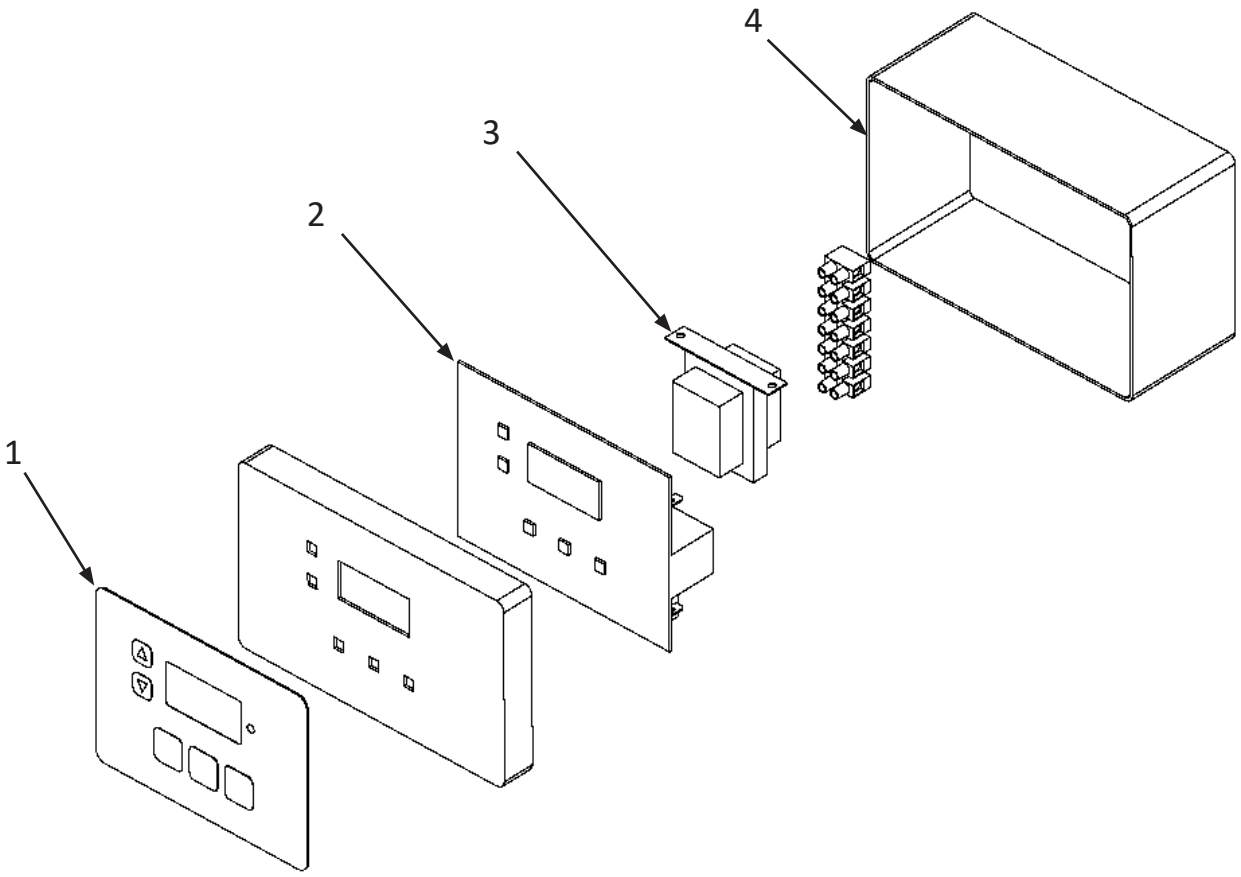

KEY #	PART #	DESCRIPTION	QTY
1	4751248	CREMATOR CONTROL DECAL	1
2	4751243B	CREMATOR CONTROLLER BOARD	1
3	4751246	CREMATOR CONTROL TRANSFORMER	1
3	4751246-50	CREMATOR CONTROL TRANSFORMER, 50 HZ	1
4	4751245	CREMATOR CONTROL BOX	1

©2026 Valco Industries, Inc.

Electronic Control Exploded & Replacement Parts List - (Oil or Gas Burner)

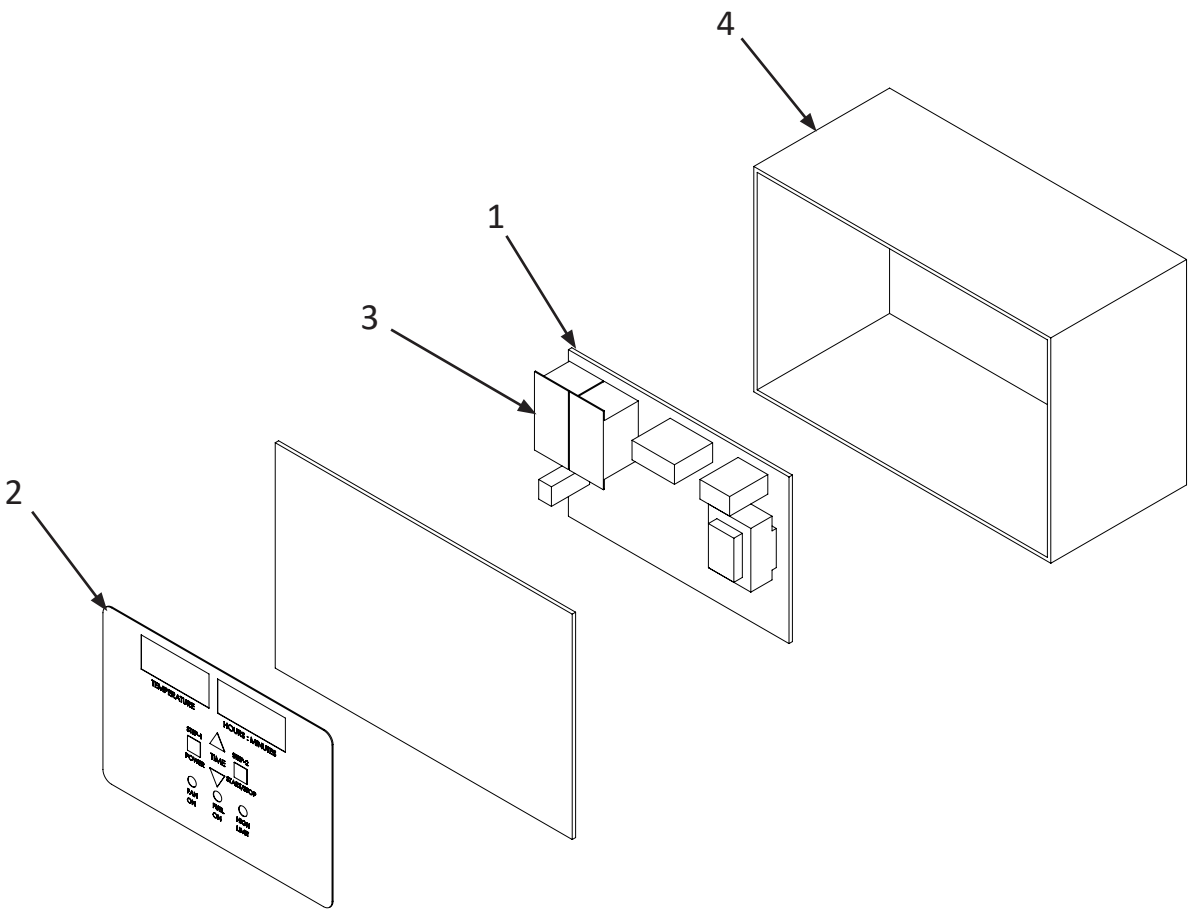

KEY #	PART #	DESCRIPTION	QTY
1	475516	ELECTRONIC CREMATOR CONTROL BOARD, 120/230V, 50/60 HZ	1
2	475517	ELECTRONIC CREMATOR CONTROL DECAL	1
3	475518	ELECTRONIC CREMATOR CONTROL RELAY	2
4	475519	ELECTRONIC CREMATOR CONTROL ENCLOSURE	1

©2026 Valco Industries, Inc.

Cremator - Exploded & Replacement Parts List

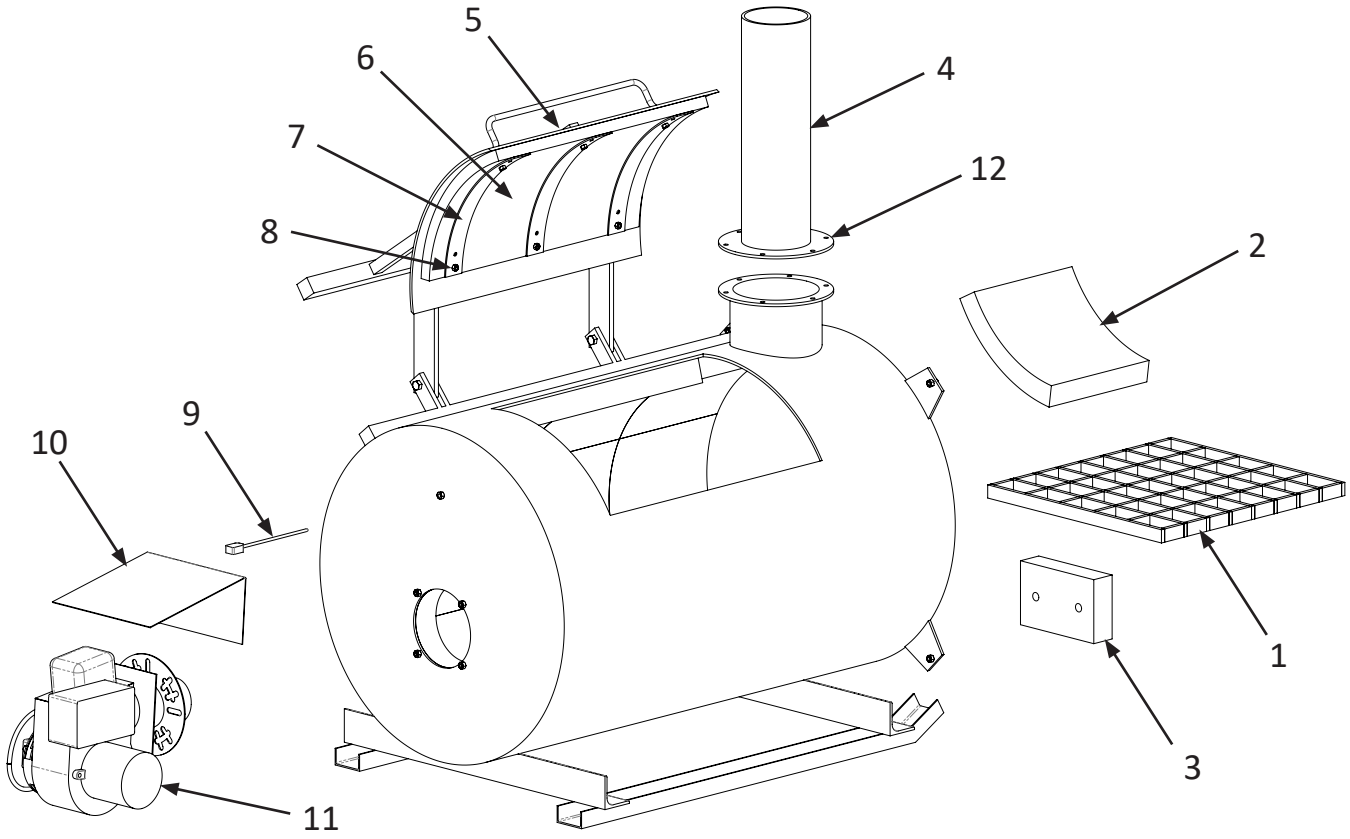

KEY #	PART #	DESCRIPTION	QTY
1	GRATE KITS		
	475090	GRATE KIT FOR MODEL 4830	1
	475091	GRATE KIT FOR MODEL 7230/8430	1
	475092	GRATE KIT FOR MODEL 8436	1
	475093	GRATE KIT FOR MODEL 9642	1
	475095	GRATE KIT FOR MODEL 10852	1
2	REPAIR LINER BLOCKS ONLY		
	475180	REPAIR LINER BLOCK ONLY FOR MODELS 4830-7230-8430	-
	475181	REPAIR LINER BLOCK ONLY FOR MODEL 8436	-
	475182	REPAIR LINER BLOCK ONLY FOR MODEL 9642	-
	475183	REPAIR LINER BLOCK ONLY FOR MODEL 10852	-
	4753510	MORTAR - 15 LB PAIL	-
	4753511	MORTAR - 55 LB BAG	-
-	BLOCK LINER REPLACEMENT KITS		
	475173	REPLACEMENT BLOCK LINER KIT - MODEL 8430 (Hatchery Waste Model)	-
	475174	REPLACEMENT BLOCK LINER KIT - MODEL 10852	-
	475175	REPLACEMENT BLOCK LINER KIT - MODEL 4830	-
	475176	REPLACEMENT BLOCK LINER KIT - MODEL 7230	-
	475177	REPLACEMENT BLOCK LINER KIT - MODEL 8436	-
	475178	REPLACEMENT BLOCK LINER KIT - MODEL 9642	-
	4753110	REPLACEMENT BLOCK LINER KIT - MODEL 20	-
	4753710	REPLACEMENT BLOCK LINER KIT - MODEL 8430 (Standard Model)	-

©2026 Valco Industries, Inc.

Burn Mizer™ Cremator Replacement Parts List - continued

KEY #	PART #	DESCRIPTION	QTY
3	CLEAN OUT DOOR REFRACTORY		
	475340	30” & 36” CREMATOR DIAMETER CLEAN OUT DOOR REFRACTORY	1
	475341	42” CREMATOR DIAMETER CLEAN OUT DOOR REFRACTORY	1
	475342	52” CREMATOR DIAMETER CLEAN OUT DOOR REFRACTORY	1
4	6” STACK PIPE WITHOUT FLANGE RING		
	475065-01	6” X 1’ STACK PIPE - NO FLANGE RING	1
	475065-02	6” X 2’ STACK PIPE - NO FLANGE RING	1
	475065-03	6” X 3’ STACK PIPE - NO FLANGE RING	1
	475065-04	6” X 4’ STACK PIPE - NO FLANGE RING	1
	475065-05	6” X 5’ STACK PIPE - NO FLANGE RING	1
	475065-06	6” X 6’ STACK PIPE - NO FLANGE RING	1
	475065-07	6” X 7’ STACK PIPE - NO FLANGE RING	1
	475065-08	6” X 8’ STACK PIPE - NO FLANGE RING	1
4	6” STACK PIPE WITH WELDED FLANGE RING		
	475065F-01	6” X 1’ STACK PIPE - WITH WELDED FLANGE RING	1
	475065F-02	6” X 2’ STACK PIPE - WITH WELDED FLANGE RING	1
	475065F-03	6” X 3’ STACK PIPE - WITH WELDED FLANGE RING	1
	475065F-04	6” X 4’ STACK PIPE - WITH WELDED FLANGE RING	1
	475065F-05	6” X 5’ STACK PIPE - WITH WELDED FLANGE RING	1
	475065F-06	6” X 6’ STACK PIPE - WITH WELDED FLANGE RING	1
	475065F-07	6” X 7’ STACK PIPE - WITH WELDED FLANGE RING	1
	475065F-08	6” X 8’ STACK PIPE - WITH WELDED FLANGE RING	1
4	8” STACK PIPE WITHOUT FLANGE RING		
	475066-01	8” X 1’ STACK PIPE - NO FLANGE RING	1
	475066-02	8” X 2’ STACK PIPE - NO FLANGE RING	1
	475066-03	8” X 3’ STACK PIPE - NO FLANGE RING	1
	475066-04	8” X 4’ STACK PIPE - NO FLANGE RING	1
	475066-05	8” X 5’ STACK PIPE - NO FLANGE RING	1
	475066-06	8” X 6’ STACK PIPE - NO FLANGE RING	1
	475066-07	8” X 7’ STACK PIPE - NO FLANGE RING	1
	475066-08	8” X 8’ STACK PIPE - NO FLANGE RING	1
4	8” STACK PIPE WITH WELDED FLANGE RING		
	475066F-01	8” X 1’ STACK PIPE - WITH WELDED FLANGE RING	1
	475066F-02	8” X 2’ STACK PIPE - WITH WELDED FLANGE RING	1
	475066F-03	8” X 3’ STACK PIPE - WITH WELDED FLANGE RING	1
	475066F-04	8” X 4’ STACK PIPE - WITH WELDED FLANGE RING	1
	475066F-05	8” X 5’ STACK PIPE - WITH WELDED FLANGE RING	1
	475066F-06	8” X 6’ STACK PIPE - WITH WELDED FLANGE RING	1
	475066F-07	8” X 7’ STACK PIPE - WITH WELDED FLANGE RING	1
	475066F-08	8” X 8’ STACK PIPE - WITH WELDED FLANGE RING	1
4	10” STACK PIPE WITHOUT FLANGE RING		
	475068-01	10” X 1’ STACK PIPE - NO FLANGE RING	1
	475068-02	10” X 2’ STACK PIPE - NO FLANGE RING	1
	475068-03	10” X 3’ STACK PIPE - NO FLANGE RING	1
	475068-04	10” X 4’ STACK PIPE - NO FLANGE RING	1
	475068-05	10” X 5’ STACK PIPE - NO FLANGE RING	1
	475068-06	10” X 6’ STACK PIPE - NO FLANGE RING	1
	475068-07	10” X 7’ STACK PIPE - NO FLANGE RING	1
	475068-08	10” X 8’ STACK PIPE - NO FLANGE RING	1

©2026 Valco Industries, Inc.

Burn Mizer™ Cremator Replacement Parts List - continued

KEY #	PART #	DESCRIPTION	QTY
4		10” STACK PIPE WITH WELDED FLANGE RING	
	475068F-01	10” X 1’ STACK PIPE - WITH WELDED FLANGE RING	1
	475068F-02	10” X 2’ STACK PIPE - WITH WELDED FLANGE RING	1
	475068F-03	10” X 3’ STACK PIPE - WITH WELDED FLANGE RING	1
	475068F-04	10” X 4’ STACK PIPE - WITH WELDED FLANGE RING	1
	475068F-05	10” X 5’ STACK PIPE - WITH WELDED FLANGE RING	1
	475068F-06	10” X 6’ STACK PIPE - WITH WELDED FLANGE RING	1
	475068F-07	10” X 7’ STACK PIPE - WITH WELDED FLANGE RING	1
	475068F-08	10” X 8’ STACK PIPE - WITH WELDED FLANGE RING	1
5		REPAIR DOORS ONLY	
	475220	REPAIR DOOR ONLY - 1 DOOR - 28” x 18”	1
	475221	REPAIR DOOR ONLY - 1 DOOR - 36” x 18”	1
	475222	REPAIR DOOR ONLY - 1 DOOR - 42” x 18”	1
	475223	REPAIR DOOR ONLY - 1 DOOR - 48” x 22”	1
	475225	REPAIR DOOR ONLY - 1 DOOR - 54” x 23”	1
	475227	REPAIR DOOR ONLY - 1 DOOR - 66” X 31”	1
	475228	REPAIR DOOR ONLY - 1 DOOR - 77” X 45”	1
6		REPAIR INSULATION ONLY	
	475161	FOR 1 DOOR 36” X 18”	1
	475162	FOR 1 DOOR 42” X 18”	1
	475163	FOR 1 DOOR 48” X 22”	1
	475165	FOR 1 DOOR 54” X 23”	1
	475166	FOR 1 DOOR 66” X 31”	1
	475167	FOR 1 DOOR 77” X 45”	1
-		DOOR REPAIR INSULATION KITS	
	475150	REPAIR INSULATION KIT W/HDWE FOR 1 DOOR - 28” X 18”	1
	475151	REPAIR INSULATION KIT W/HDWE FOR 1 DOOR - 36” X 18”	1
	475152	REPAIR INSULATION KIT W/HDWE FOR 1 DOOR - 42” X 18”	1
	475153	REPAIR INSULATION KIT W/HDWE FOR 1 DOOR - 48” X 22”	1
	475155	REPAIR INSULATION KIT W/HDWE FOR 1 DOOR - 54” X 23”	1
	475156	REPAIR INSULATION KIT W/HDWE FOR 1 DOOR - 66” X 31”	1
	475157	REPAIR INSULATION KIT W/HDWE FOR 1 DOOR - 72” X 51”	1
	475170	REPAIR INSULATION - FULL ROLL 34” W X 25’ L 70.8SQFT/6.58SQM	1
	475171	REPAIR INSULATION - FULL ROLL 36” W X 25’ L - 75SQFT/6.97SQM	1
	475172	REPAIR INSULATION - FULL ROLL 46” W X 25’ L 100SQFT/9.29SQM	1
7		DOOR STRAP / INSULATOR PLATE / OTHER MISC. REPAIR PARTS	
	475145	5” X 16” STRAP FOR 28” X 18”, 36” X 18”, 42” X 18” & 48” X 22” DOOR	-
	475146	5” X 10” STRAP FOR 48” X 22”, 54” X 23”, 66” X 31” & 77” X 45” DOOR	-
8	475147	3/8” SS NUT & BOLT	-
9	4751239-160	HEAT PROBE	1
	4751238	HEAT PROBE FEMALE PLUG (Not Shown)	1
	4751241	THERMO COUPLE WIRE (Per Foot)	-
10	4753902	RAIN SHIELD	1
11		REPAIR BURNERS (Refer to the OIL or GAS BURNER parts lists)	1
12		FLANGE RINGS	
	4751530	6” CREMATOR STACK FLANGE	1
	4751531	7” CREMATOR STACK FLANGE	1
	4751532	8” CREMATOR STACK FLANGE	1
	475069	10” CREMATOR FLANGE RING	1

©2026 Valco Industries, Inc.

Gas Burner Installation (Specific to Gas Burner ONLY)

If you are installing an OIL burner unit DO NOT USE THIS SECTION; instead refer to the OIL BURNER section starting on page 14.

Gas Burner – Gas Line Set-up

Figure 14

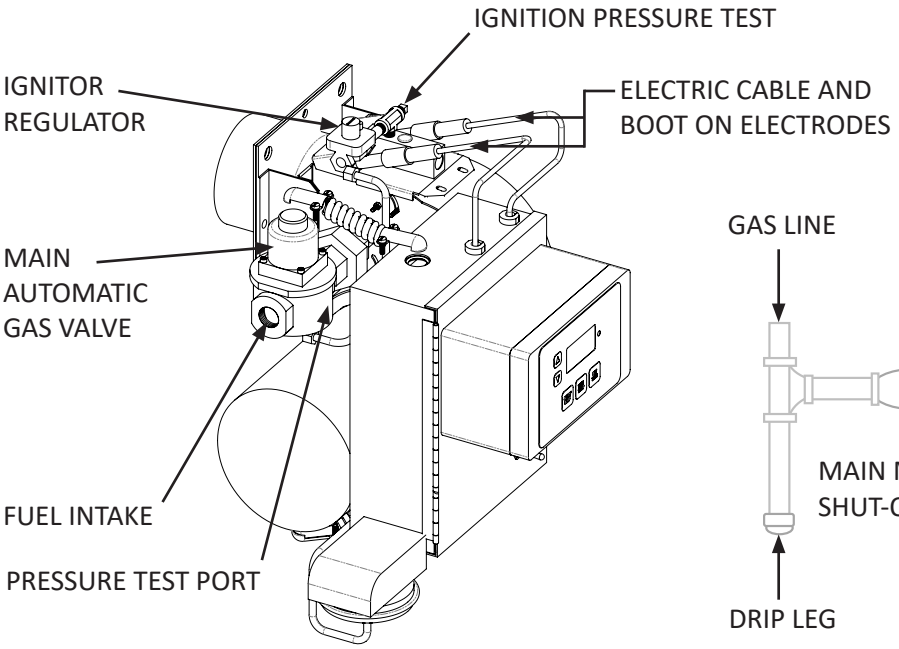

Figure 15

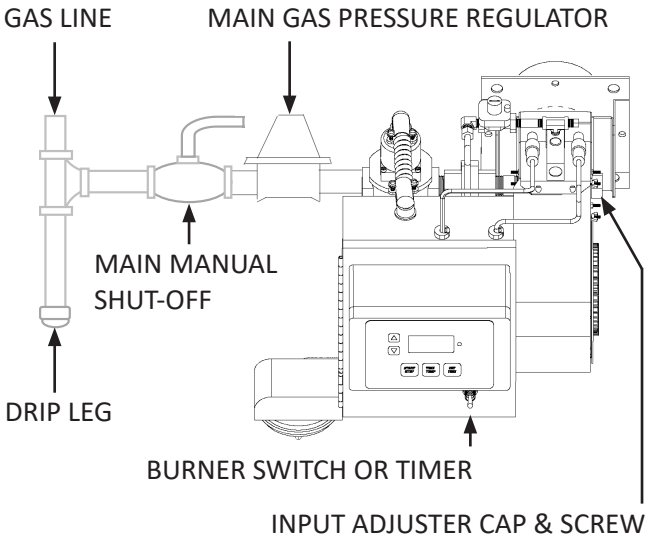

Main Gas Pressure Regulator, Shut-off Valve and pluming supplies will be provided and installed by your local area fuel supplier. SEE GAS BURNER MANUAL FOR DETAILS.

Figure 16 – Overview of Propane Tank Plumbing

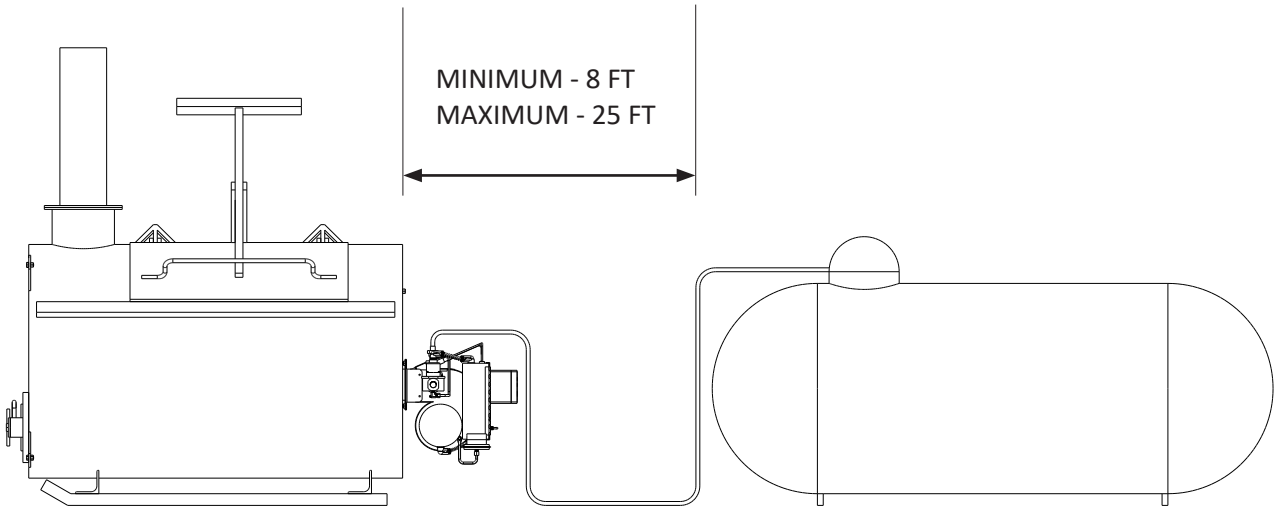

©2026 Valco Industries, Inc.

Gas Burner - Primary Chamber Fuel Input

REFER TO THE BURNER MANUAL INCLUDED WITH THE BURNER FOR MORE DETAILS!

Gas Burner - Initial Start Up / Adjustment

THE MAIN GAS INPUT ADJUSTER ARRIVES FROM THE FACTORY PRE-SET. GAS PRESSURE ADJUSTMENTS FOR START-UP AND OPERATION MUST BE FOLLOWED ACCORDING TO THE INSTRUCTIONS IN THE BURNER MANUFACTURER MANUAL, OR THE CREMATOR WARRANTY WILL BE VOIDED, AS DAMAGE CAN OCCUR TO THE UNIT. REFER TO THE INSTALLATION SECTION OF THE BURNER MANUAL INCLUDED WITH THE BURNER FOR MORE DETAILS.

Gas Burner - Location

REFER TO THE BURNER MANUAL INCLUDED WITH THE BURNER FOR MORE DETAILS!

Gas Burner - Wiring

Refer to Gas Burner wiring diagram”*” on pages 37 & 38.

WARNING: Electrical wiring must be done by a qualified Electrician!

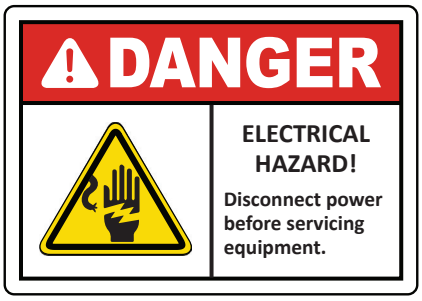

©2026 Valco Industries, Inc.

Gas Burner - Plumbing

WARNING!

Failure to follow instructions exactly may result in causing property damage, personal injury or death. Installation must conform to local codes, in the absence of local codes, the latest edition of National Fuel Gas Code is available from the American National Standard Institute. (Refer to the manual included with your Burner for more detail on conversions or changes, which must be made by the Burner manufacturer.)

CODE COMPLIANCE IS THE SOLE RESPONSIBILITY OF THE INSTALLER.

1. When installing plumbing for burners, 3/4" pipe or larger should be used. The supply piping to the burner should branch off from the main line as close to the source as possible (NATURAL gas meter or PROPANE tank regulator). When branching off from an existing gas line, do not tap off the bottom of a horizontal section. Use new black pipe and malleable fittings free from cutting and threading burrs or defects.
2. When selecting the burner supply piping size use Table 1 below. The permissible pressure drop must be based on the pressure available at the inlet to the supply pipe branch line when all other gas equipment fed by the same source (NATURAL gas meter or PROPANE tank regulator) is firing at full rate. You also need to take into account any other INCINOMITE burners to be attached to the same branch line.
3. Use pipe joint compound resistant to liquid petroleum gases when using either NATURAL or PROPANE gas.

Table 1 (Capacities shown are for total pressure drop of 0.3"W.C. For higher permissible pressure drops, consult your fuel supplier. SOURCE: Gas Engineers Handbook – 1974 Industrial Press Inc. NY, NY

NPT PIPE SIZE	TYPE OF GAS	APPROXIMATE CAPACITY - MBH LENGTH OF PIPE / FEET				
		10	20	40	60	100
¾"	Natural	275	200	130	100	---
	Propane	450	300	200	165	125
1"	Natural	520	350	245	195	150
	Propane	800	550	385	300	235
1 ¼"	Natural	800	730	500	400	300
	Propane	---	800	790	630	480
1 ½"	Natural	---	800	760	610	460
	Propane	---	---	800	800	725
2"	Natural	---	---	800	800	800
	Propane	---	---	---	---	800

4. A suitable Main Gas Pressure Regulator should be installed.

(Local area fuel supplier will provide and install the regulator and gas line hook-ups.)

©2026 Valco Industries, Inc.

CAUTION!
If gas supply pressure is below its specified range during adjustment, an over-fire condition could result when pressure returns to normal, particularly if the regulator adjustment screw is bottomed out. ALWAYS confirm that at least the minimum rated pressure is being supplied during regulator adjustments, and NEVER BOTTOM OUT regulator screw.

5. When pressure testing the supply piping, the burner valve train must be protected. If the test pressure is 0.5 PSIG or less, closing the Main Manual Shut-Off Valve will suffice.

If the test pressure is over 0.5 PSIG, the test must be made without any burner components connected, including Main Manual Shut-Off Valves.

WARNING: EXPLOSION HAZARD. DO NOT USE OXYGEN FOR PRESSURE TESTING. AN EXPLOSION COULD OCCUR DURING INITIAL START-UP.

REFER TO THE MANUAL INCLUDED WITH YOUR BURNER FOR MORE DETAILS!

CAUTION!
Regulated gas pressures must not exceed 14” W.C. or Main Automatic Gas Valve and Ignitor Regulator will be damaged. If excessive gas pressure is prevalent, the regulator must be a tight shut-off type to prevent high pressures from developing during stand-by.

REFER TO THE MANUAL INCLUDED WITH YOUR BURNER FOR MORE DETAIL!

6. Set the input BTU’s based on the cremator model:
   Model 4830 = 185,000 BTU
   Model 7230 &8430 = 210,000 BTU
   Model 8436 = 280,000 BTU
   Model 9642 = 315,000 BTU
   Model 10852 = 350,000 BTU
   20” Secondary Afterburner = 168,000 BTU
   12” Secondary Afterburner = 154,000 BTU

   Follow the chart on the following page.

©2026 Valco Industries, Inc.

Gas Burner - Gas Pressure

Gas Pressure at Main Automatic Valve (Inches Water Column)

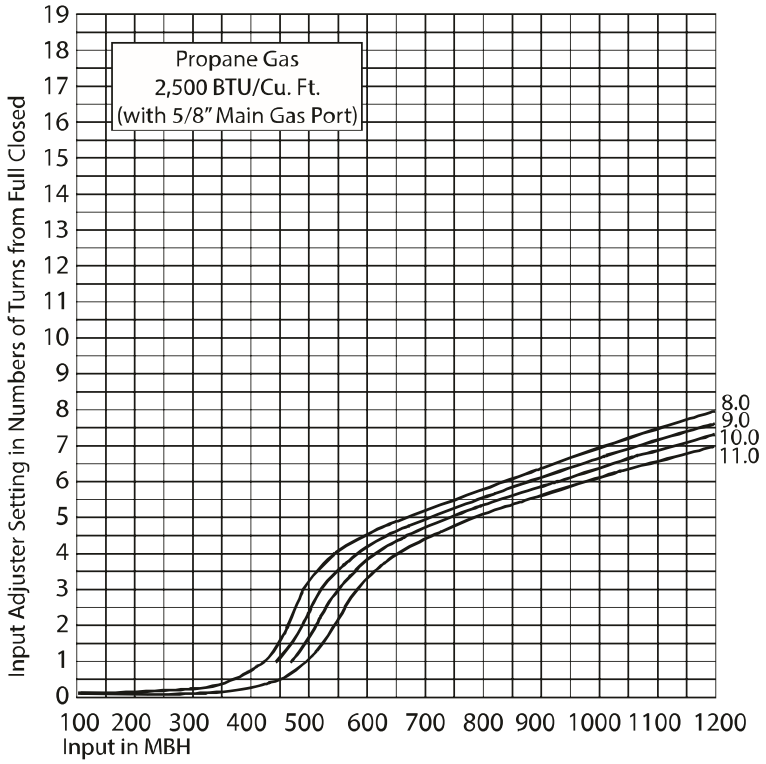

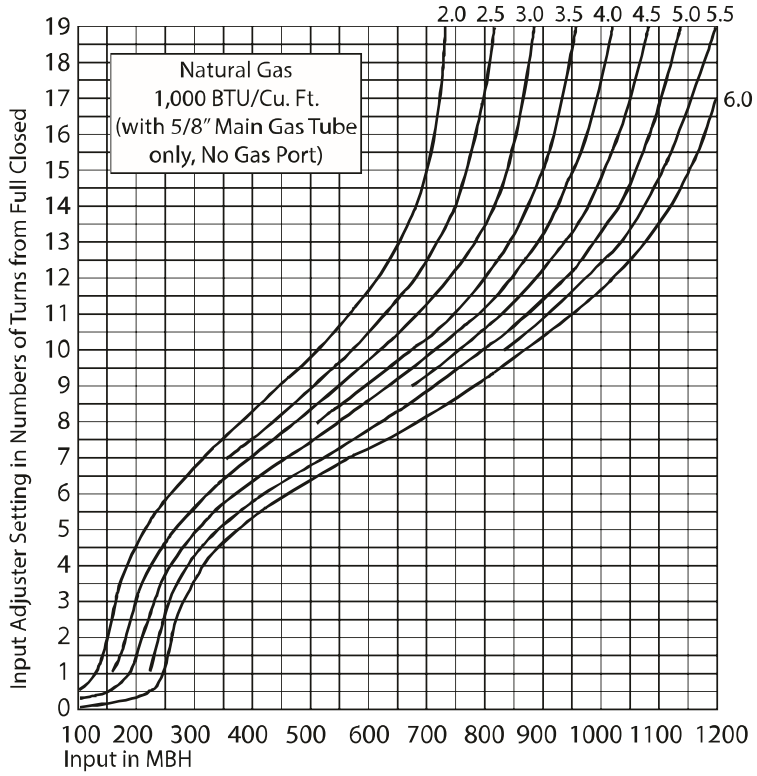

Firing Rate in MBH (1200 MBH = 1,200,000 BTU/Hr.)

©2026 Valco Industries, Inc.

Gas Burner - Digital Control with Terminal Strip Wiring Diagram

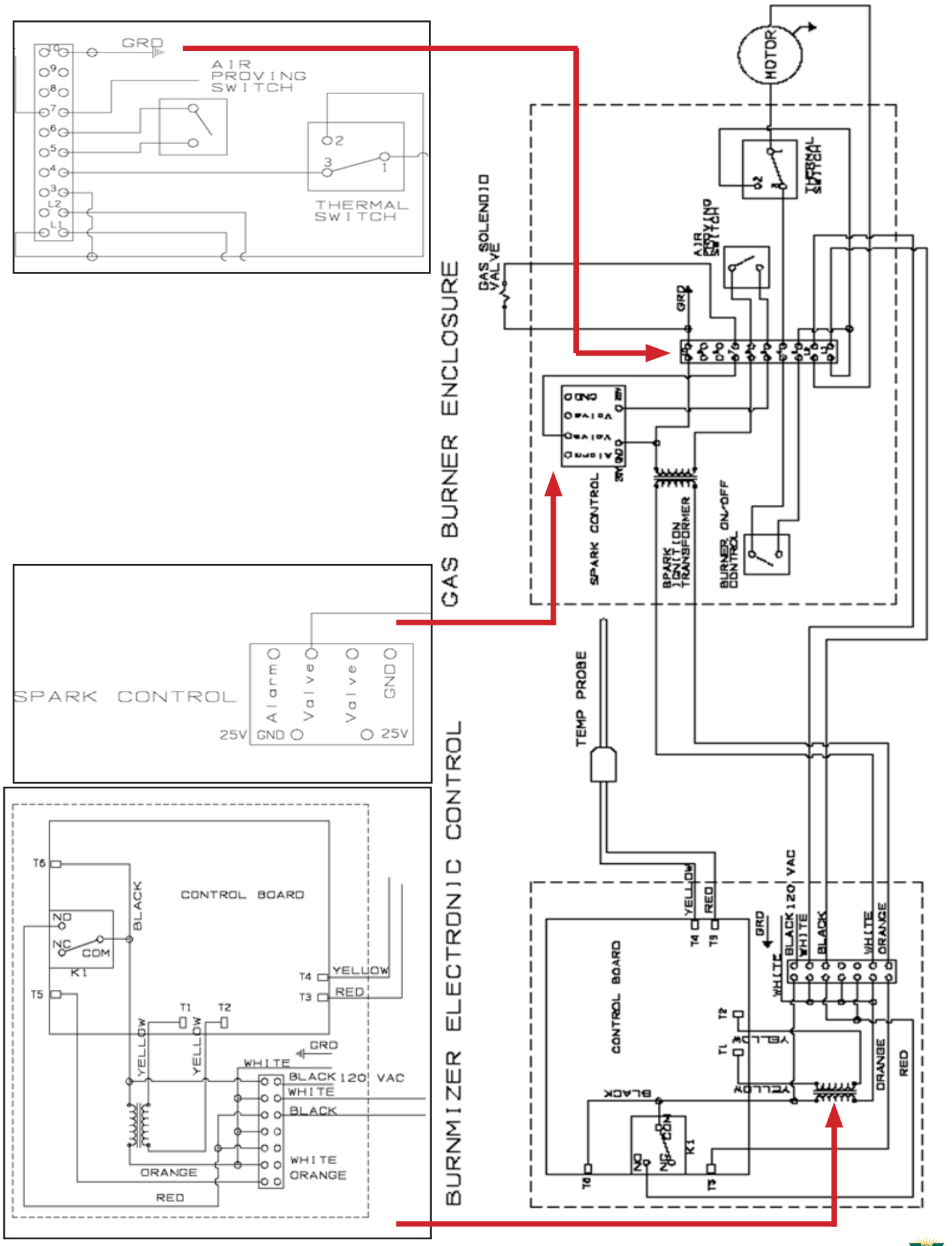

©2026 Valco Industries, Inc.

Gas Burner - Electronic Control Wiring Diagram

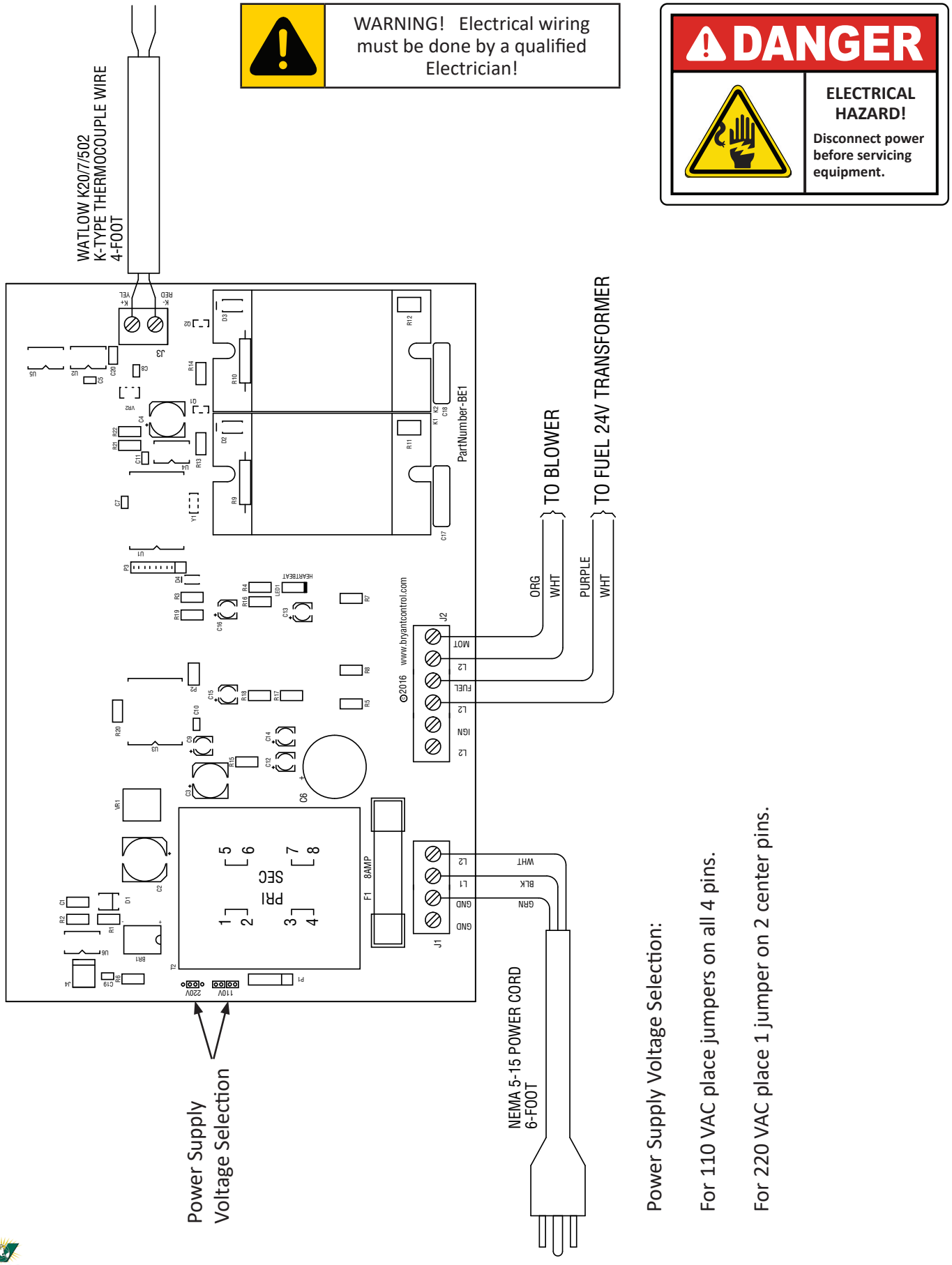

©2026 Valco Industries, Inc.

Gas Burner - Power and Rain Shield Installation

1. Plug in the attached power cord to the proper voltage outlet.
2. A 20-amp service is recommended. (12 gauge wire)

Before proceeding!
Be sure that you have checked for leaks and that you have followed the recommendation for connecting the power cord to a 20 amp service and used a 12 gauge wire.

3. Install the rain shield by bolting the shield to the square flange between the chamber and burner transformer.

Figure 17

Bolt in center hole with bolt and nut attached.
Bolt with top (2) bolts on burner flange.

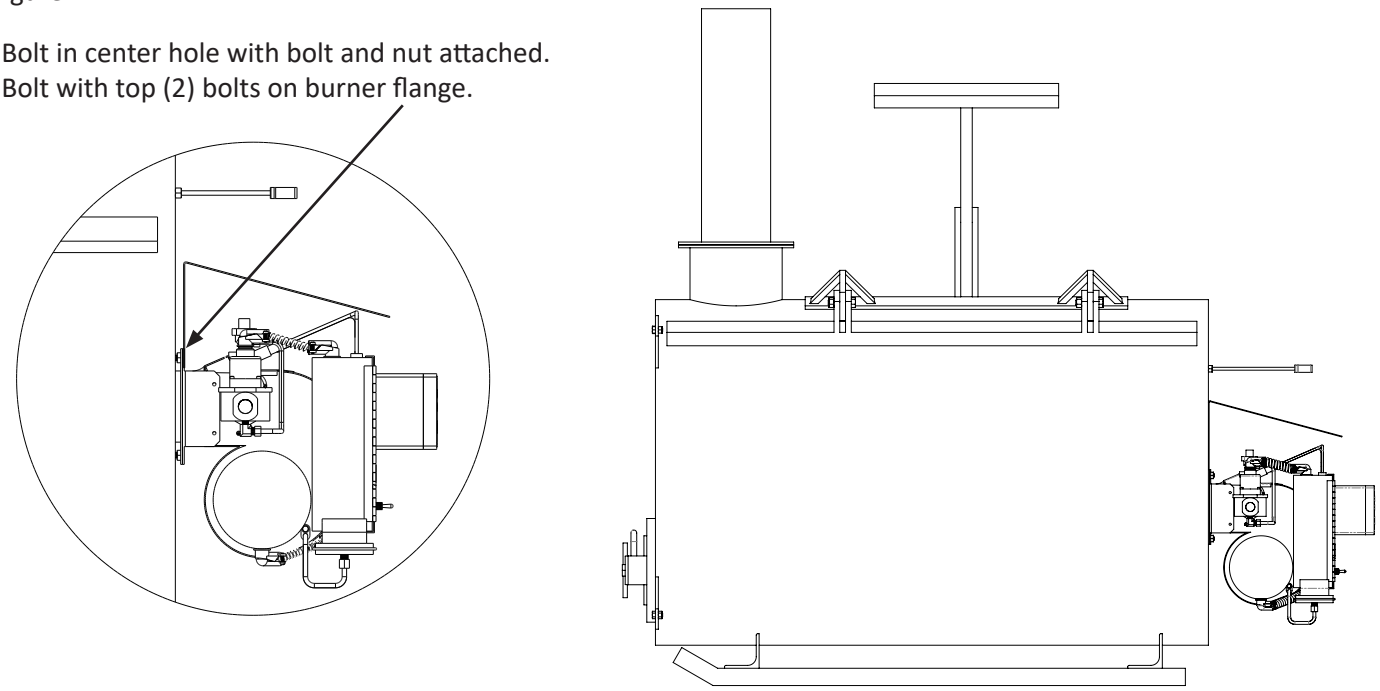

Testing the Burner

Run a burner test before loading the cremator with a carcass.

The Unit will fire after the fuel line is PURGED on a Gas Burner.

(REFER TO BURNER MANUAL INCLUDED WITH YOUR BURNER.)

©2026 Valco Industries, Inc.

Gas Burner - Exploded Drawing and Parts List

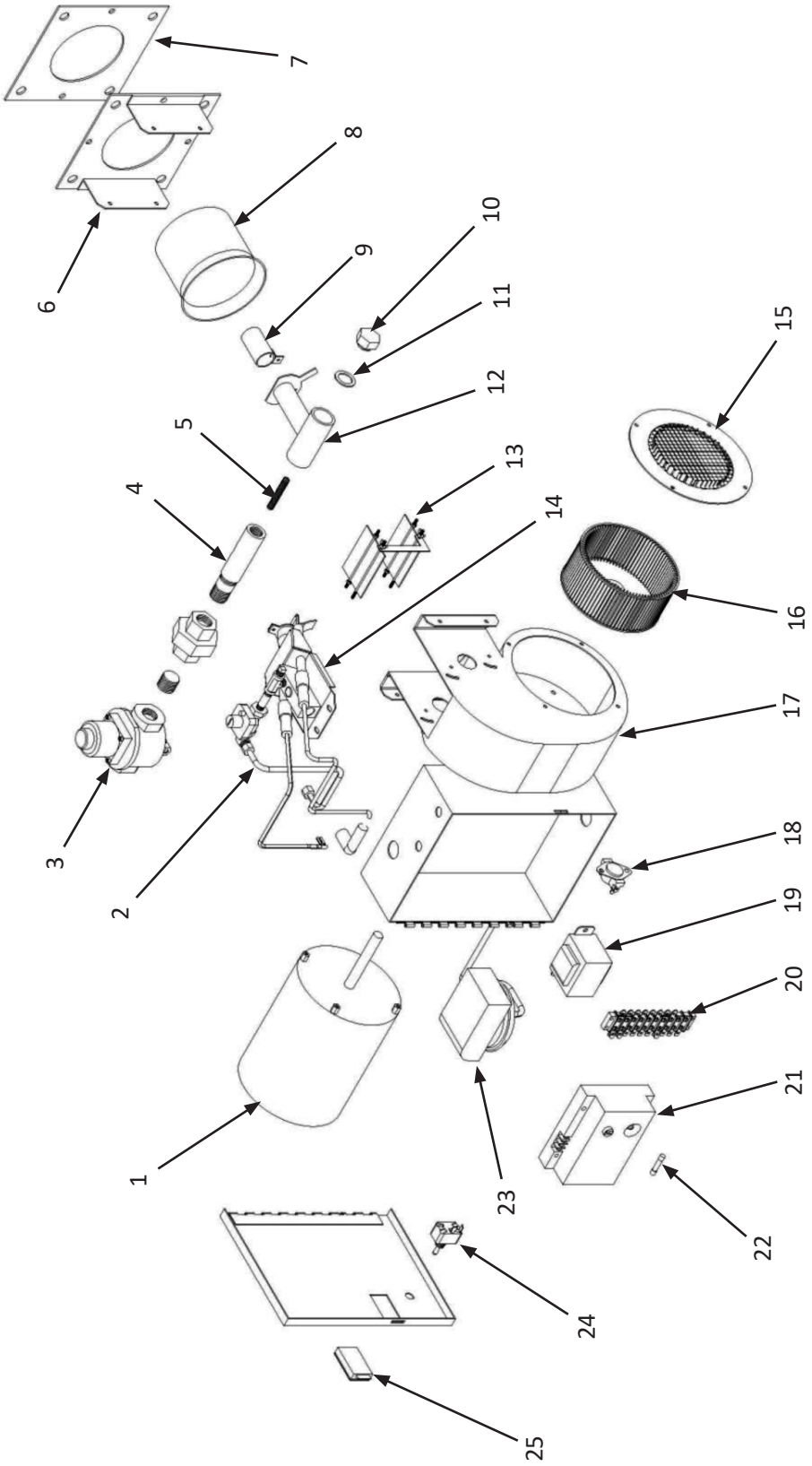

©2026 Valco Industries, Inc.

Gas Burner - Parts List continued with Replacement Parts

KEY #	PART #	DESCRIPTION	QTY
1	4756443-50	1/6 HP MOTOR	1
2	4756412-96	J121-DS NATURAL IGNITOR CONTROL PIPING	1
2	4756412-98	J121-DS PROPANE IGNITOR CONTROL PIPING	1
3	475645250	GAS VALVE, BURNER, 3/4” PORT	1
4	4756447-00	INPUT STOP NIPPLE	1
5	4756404-90	INPUT ADJUSTER SCREW ASSEMBLY	1
6	4756407-90	MOUNTING FLANGE REPLACEMENT KIT	1
7	475640730	FLANGE GASKET	1
8	4756406-00	BLAST TUBE – J121 - DS	1
9	4756417-52	MAIN GAS PORT AND TUBE KIT – J121 – DS PROPANE	1
9	4756417-54	MAIN GAS PORT AND TUBE KIT – J121 – DS NATURAL	1
10	4756622-40	INPUT ADJUSTER CAP	1
11	4758450-59	INPUT ADJUSTER SEALING GASKET	1
12	4756403-00	MANIFOLD	1
13	4756401-90	SHUTTER REPLACEMENT KIT	1
14	4756481-90	IGNITOR ASSEMBLY – J121 – DS	1
15	475641690	INLET RING	1
16	4756415-00	BLOWER WHEEL – J121 – DS	1
17	4756400-80	BLOWER HOUSING	1
18	4758425-18	THERMAL SWITCH	1
19	4756447-50	TRANSFORMER	1
20	4758408-42	10 POSITION TERMINAL STRIP	1
21	475527	DSI ELECTRONIC CONTROL BOARD	1
22	4758408-76	3 AMP TYPE 3AG GLASS FUSE	1
23	4758425-19	BLOWER SWITCH – J121 – DS	1
24	4758423-05	ON-OFF TOGGLE SWITCH	1
25	4758445-25	LATCH BODY	1
REPAIR GAS BURNERS			
	475229	BURNER, CREMATOR, BLANK, LP, 120/230V, 50/60HZ	1
	475230	BURNER, CREMATOR, BLANK, NG, 120/230V, 50/60HZ	1
	475510	BURNER, CREMATOR, LP, 120V, 50/60HZ, ELEC CNTRL	1
	475511	BURNER, CREMATOR, NG, 120V, 50/60HZ, ELEC CNTRL	1
	475512	BURNER, CREMATOR, LP, 230V, 50/60HZ, ELEC CNTRL	1
	475513	BURNER, CREMATOR, NG, 230V, 50/60HZ, ELEC CNTRL	1
	475514	BURNER, CREMATOR, LP, MECH CNTRL, 120/230V, 50/60HZ	1
	475515	BURNER, CREMATOR, NG, MECH CNTRL, 120/230V, 50/60HZ	1

For CONTROL Exploded & Replacement Parts List – (Oil or Gas Burner), see pages 27 & 28.

©2026 Valco Industries, Inc.

Gas Burner - Exploded Ignitor Regulator and Piping

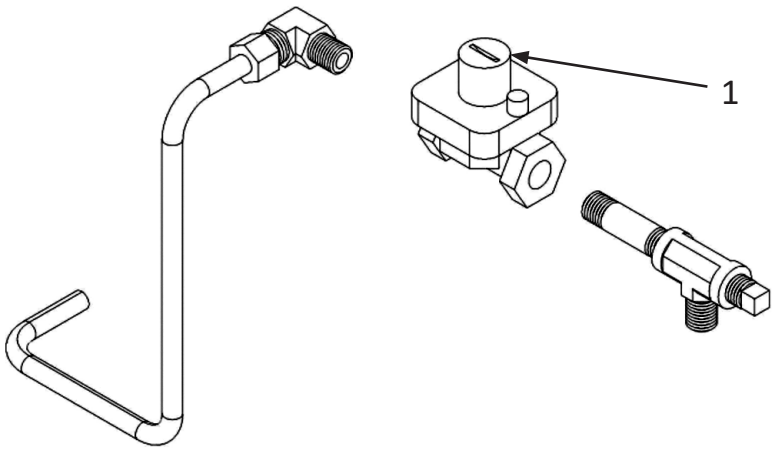

KEY #	PART #	DESCRIPTION	QTY
1	475-8400-00	IGNITOR REGULATOR 1/8” NPT	1

Exploded Ignitor Control – Replacement Parts

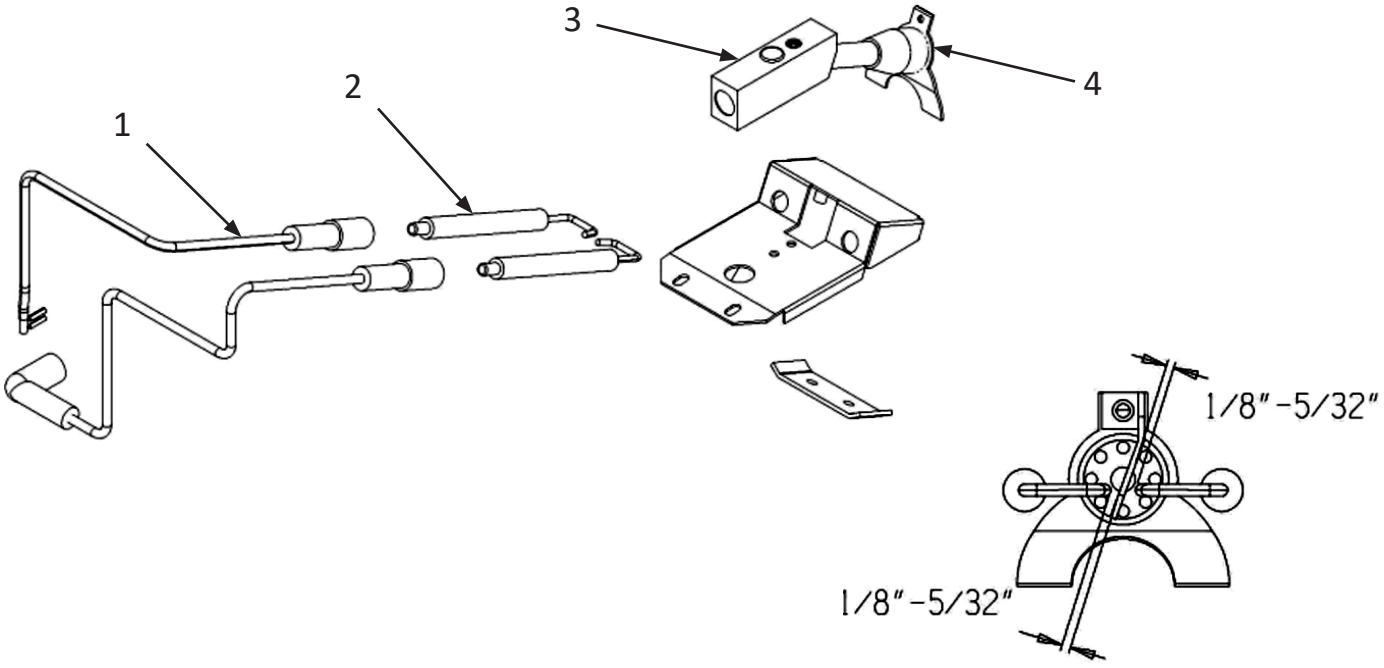

KEY #	PART #	DESCRIPTION	QTY
1	475528	ELECTRIC CABLE & BOOT	1
2	4756418-00	ELECTRODE	2
3	4756481-70	IGNITOR GAS INLET BLOCK	1
4	4756413-09	GROUND BARRIER KIT	1

©2026 Valco Industries, Inc.

Gas Burner - Maintenance and Troubleshooting



IMPORTANT!
NEVER TOUCH ANY PART OF THIS UNIT WHILE IN OPERATION! SOME METAL PARTS CAN HAVE TEMPERATURES EXCEEDING 1500 DEGREES F. SERIOUS BURNS CAN RESULT IF UNPROTECTED SKIN COMES IN CONTACT WITH THESE PARTS. PLEASE BE SAFE.

Symptom	Diagnosis	Solution
GAS BURNER **Motor won't run**	Unit is unplugged	Plug into proper power source.
	Inadequate circuit breaker	20 Amp
	Reset is kicked	Push in red reset button on the outside of motor.
	Fuse on control board blown (electronic version)	Replace with 5 amp slow blow fuse.
	Controller board is not working properly	Consult dealer.
	Thermal Switch is bad	Verify 120 VAC between terminal L2 and terminal 1 on Thermal Switch.
No Gas	Fuel level in tank	Check fuel supply.
	Check low pressure regulator	Gas inlet pressure to valve is 14" W.C. for LP, 3.5" wc for NG.
	Gas valve not opening	Check for 24 VAC on gas valve leads.
No Spark	Flashing fuel light is not on	Consult dealer.
	24 volt transformer is bad	Test for 24 VAC with fuel light on. Test on blue and yellow leads.
	DSI board	Check for 24 VAC at DSI board. Check on yellow and blue leads. Check fuse.
	Bad Electrode	Examine for cracks and adjustment.
	Air proving switch	Verify switch works properly. Be sure foreign objects are not blocking air tubes.
	Electrode spark gap	Adjust electrode so it is 1/8" – 5/32" to ground plate. *Shown on page 36.*
Burner only burns for 6 seconds.	Sense side electrode	Clean and adjust for proper setting. Adjust so it is 1/8" – 5/32" to ground plate. Replace if cracked. *Shown on page 36.*
	Low gas pressure.	Test "T" block orifice for 3.5" W.C. Adjust pilot regulator.
	"T" block orifice is obstructed	Remove and clean "T" block orifice.

©2026 Valco Industries, Inc.

Symptom	Diagnosis	Solution
Cremator smokes	Improper air adjustment	Adjust air band for maximum air and no black smoke. (Adjust the air band while the unit is firing).
	Unit is overloaded	Air circulation inside unit is important. *See page 19.*
Control board reads "probe fail" message	Heat probe sensor is bad	Replace
	Yellow probe wire cracked	Replace
	Heat probe plug needs cleaned or replaced.	Replace
Burner Unit Vibrates	Fan is unbalanced	Check for ice or snow on fan.
		Check for rodents in fan.
		Check for bent fan.

The Burn Mizer cremator is a very durable and dependable unit. It does require some general maintenance to keep the unit running properly.

1. Keep fan intake screen clean at all times.
2. Any missing tile should be replaced immediately. Replacements can be shipped UPS and are relatively easy to repair. This would also include the blanket that is on the inside of the door.
3. Keep unit cleaned out. We recommend cleaning after each burn.



FOR MORE DETAIL ON TESTING SEE THE BURNER MANUAL INCLUDED WITH YOUR BURNER.

©2026 Valco Industries, Inc.

Customer Service

Dealer Name: _____

Street / PO Box _____

City _____

State / Province _____

Zip / Postal _____

Phone _____

Fax _____

E-mail _____

Web site _____

Customer Service
210 E. Main Street
Coldwater, OH 45828
800.998.2526



North America:
Phone: 800.99VALCO (800.998.2526)
Fax: 419.678.2200
Email: sales@val-co.com

International:
Phone: (+1) 419.678.8731
Fax: (+1) 419.678.2200
Email: intl.sales@val-co.com

©2026 Valco Industries, Inc.