# Freedom Nest Belt Transfer

## Installation Quick Sheet

631721, 631722

## Overview

This sheet provides diagrams and general instructions to assemble the Freedom Nest belt transfer. A belt transfer is an additional belt drive and transition that allows eggs to smoothly roll from one belt onto the other. An egg belt transfer allows a Freedom Nest system to extend longer than a single belt and drive would allow. Please refer to the ***Freedom Nest Manual*** (**990004**) for maximum length specifications.

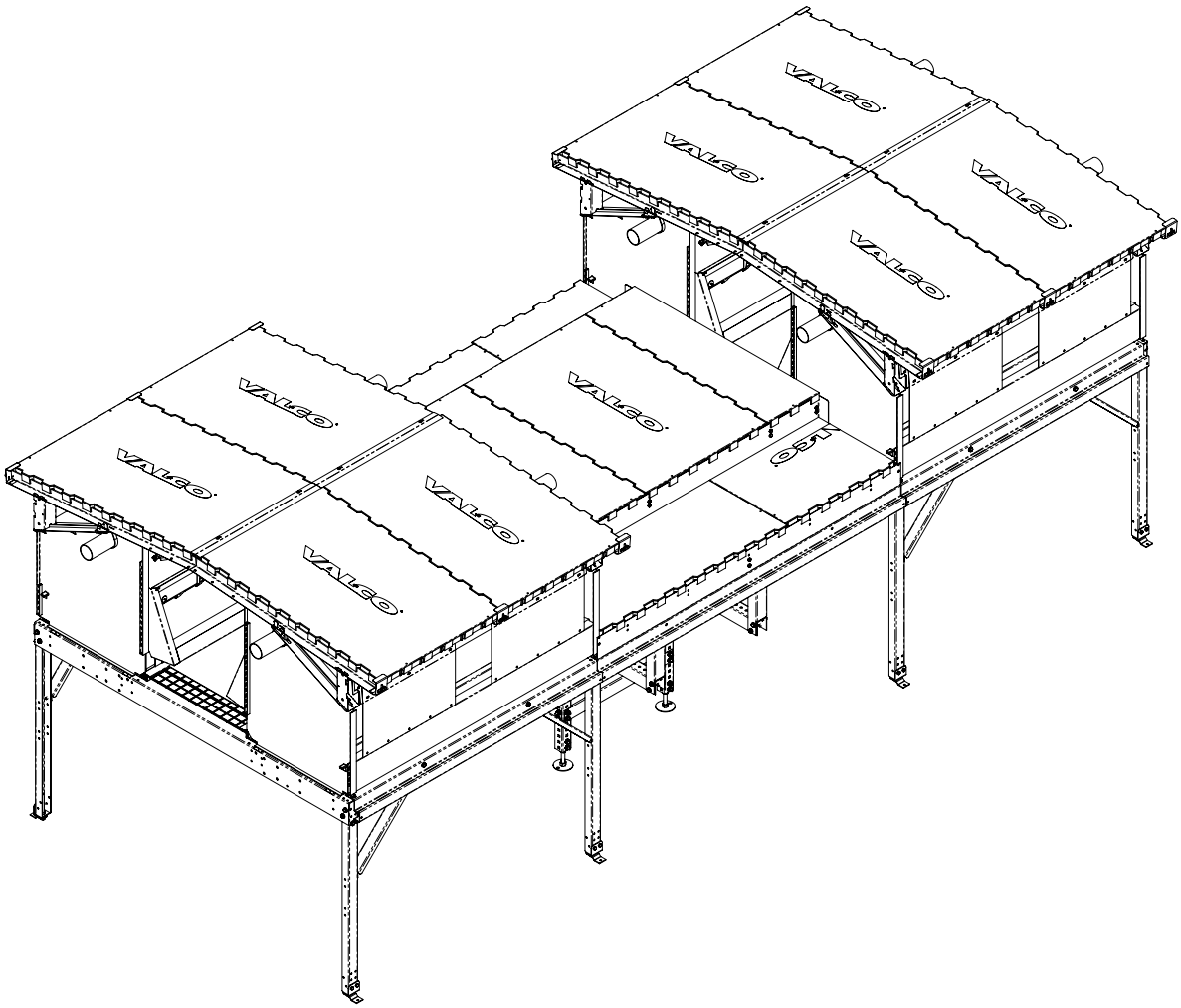

## Introduction

Please refer to the ***Freedom Nest Manual*** (**990004**) before beginning assembly. Reference your barn layout before beginning assembly to verify the locations where the major components (belt drives, nests, crossovers, transfers, etc.) will be located. Assemble the system in the order described in that manual.

## Installation

1. When assembling the frames at the location where the transfer will go, install the front rails (631248 for the front rails with slat ridges, 630799 for the flat front rails) and continue assembling the nest row as detailed in the ***Freedom Nest Manual*** (**990004**). Install the egg belt for the second section of nests, but leave at least 10’ (3.05m) of extra egg belt in the area where the transfer will be. The extra egg belt will be used to thread it through the drive and lace the egg belt together.

2. Install the transfer cross brace supports using the 5/16-18 hardware shown in Figure 1.

**Figure 1**

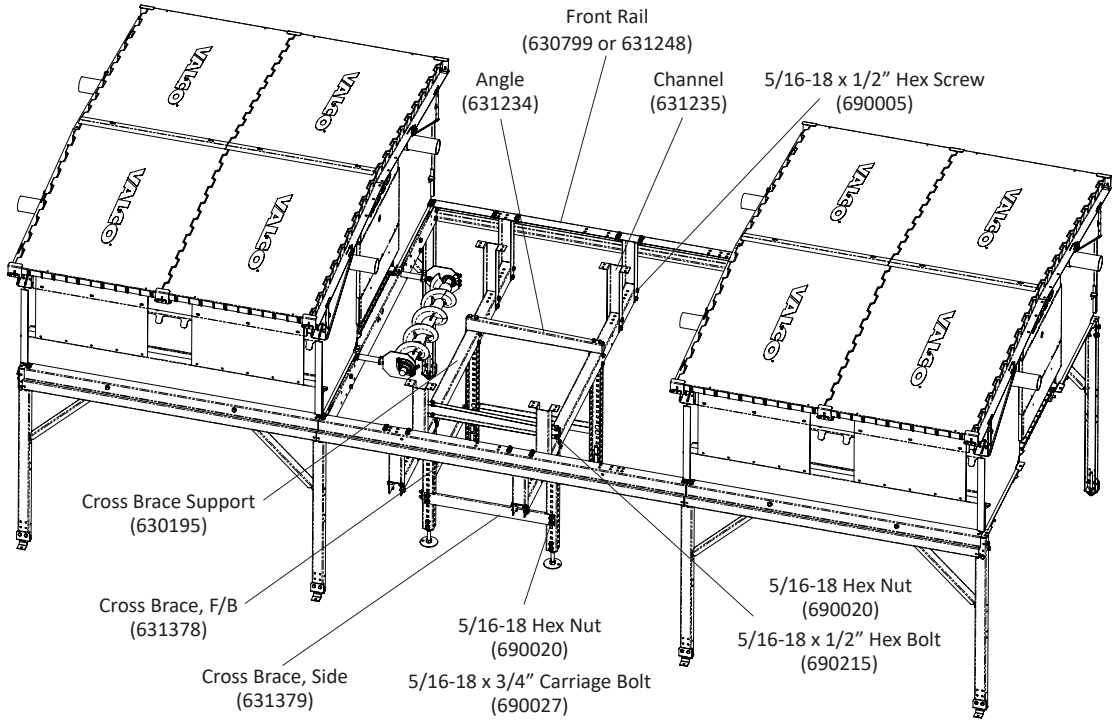


3. Install the legs as shown in Figures 1 to 4. Leg length will depend on the length of the legs currently being used to support the entire nest. Cut the legs (631409) so that there is 2-3” of clearance between the bottom of the leg and the ground when the legs are installed.

**NOTE:** To adjust the foot bolt (410895), loosen the 1/2-13 foot nuts (690227) and adjust foot bolt up or down, as shown in Figure 2. To move the foot bracket (631387) or to cut leg to a desired height, adjust foot bolt down to access and disassemble (2) 5/16-18 x 3/4” carriage bolts (690027) and (2) 5/16-18 kep nuts (690020), as shown in Figure 3. Cut Leg to height if required, reassemble foot bracket to required height and reassemble bolts and nuts, as shown in Figures 3 and 4. Adjust foot bolt to desired height and retighten foot nuts.

**Figure 2**

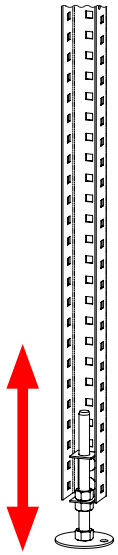

**Figure 3**

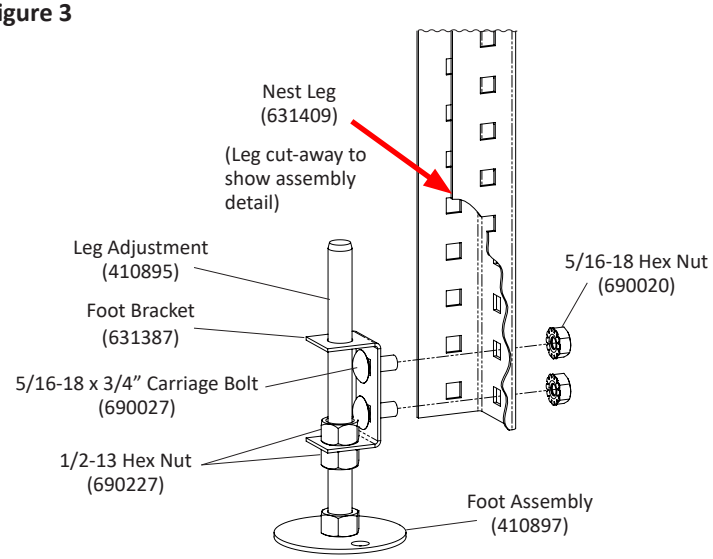


**Figure 4**

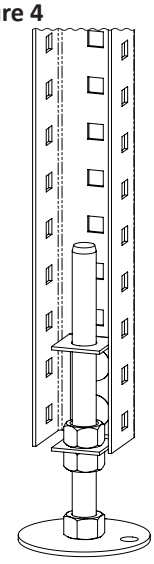



©2026 Valco Industries, Inc.

4. Install the belt drive (630855) and the egg belt assembly through wall kit (630594) using the 5/16-18 hardware shown in Figure 5. Please refer to the ***Freedom Nest Manual*** (**990004**) for assembly instructions.

**Figure 5**

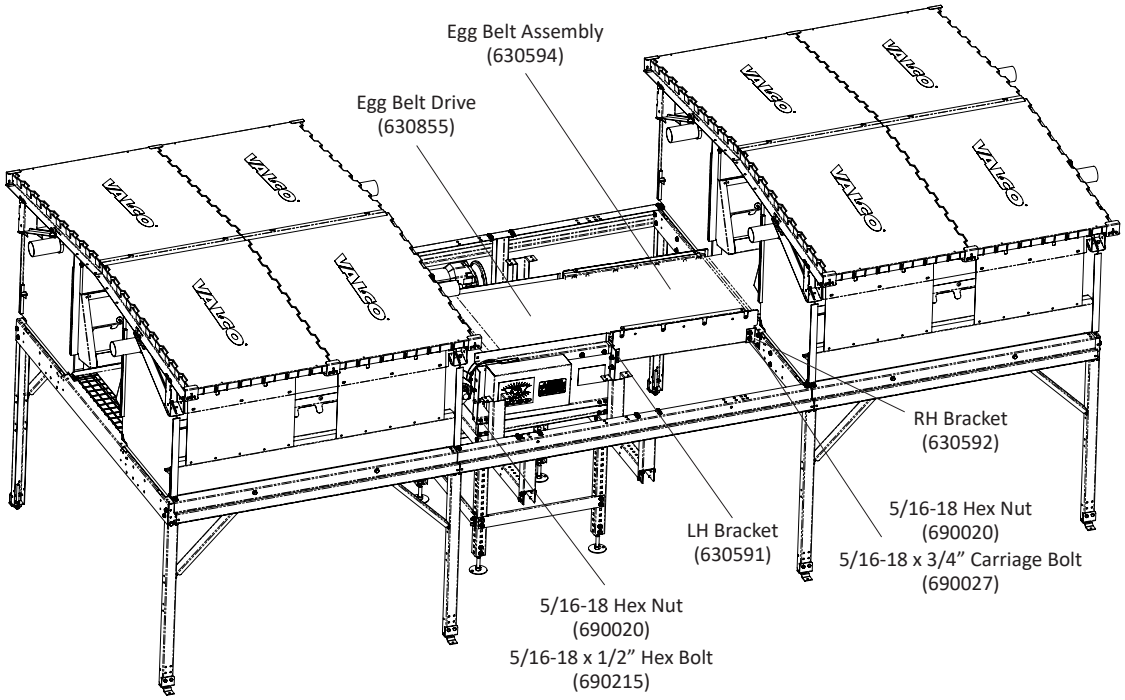


5. Install (2) support channels (630650) underneath the last nest in the first section of nests using the 5/16-18 hardware shown in Figure 6. Underneath the first nest after the belt transfer, install the belt take up. Install (2) support channels (630519) in that first nest using the supplied 5/16-18 hardware, then install the take up rollers using the supplied 1/4-20 hardware shown in Figure 6. The take up can be moved to different holes in the support channels (630519) if needed.

**Figure 6**

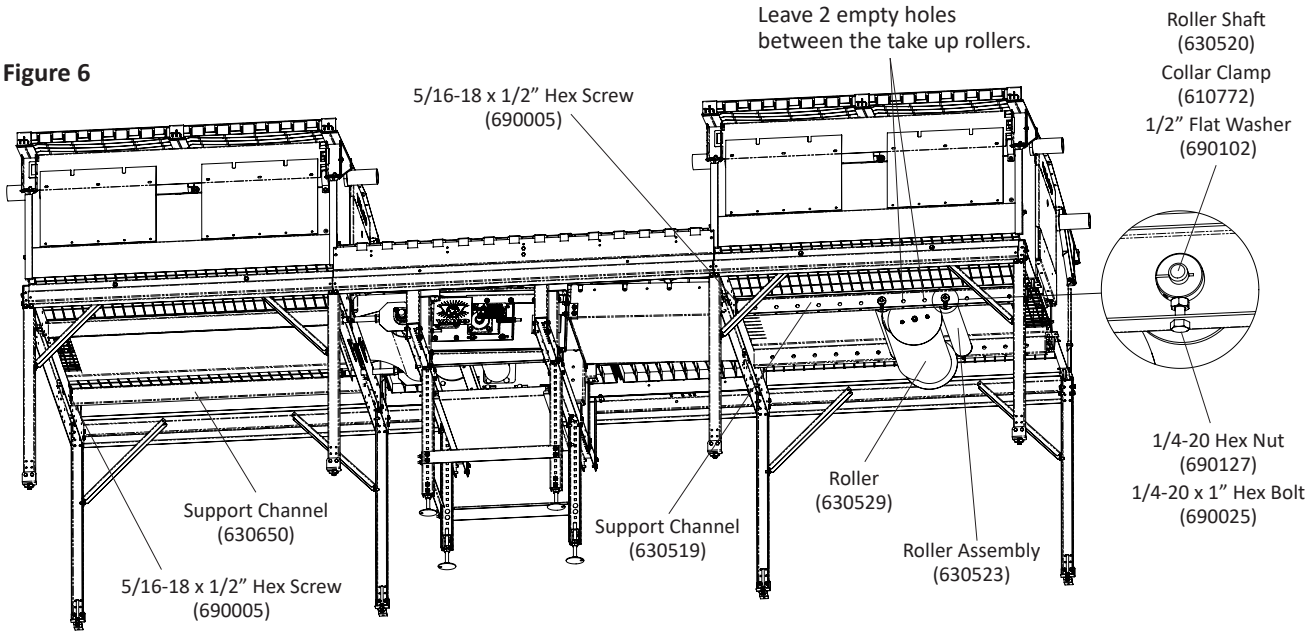


©2026 Valco Industries, Inc.

6. Thread the egg belts and install the transfer support (630329) using the 5/16-18 hardware shown in Figure 7. Then install the egg transfer assembly (630193) using the #10-24 hardware shown in Figure 7. Be sure to leave 5/16” (8mm) clearance between the egg transfer assembly and the egg belt to allow the egg belt splice to pass through the gap between the egg transfer assembly and the egg belt drive roller.

**Figure 7**

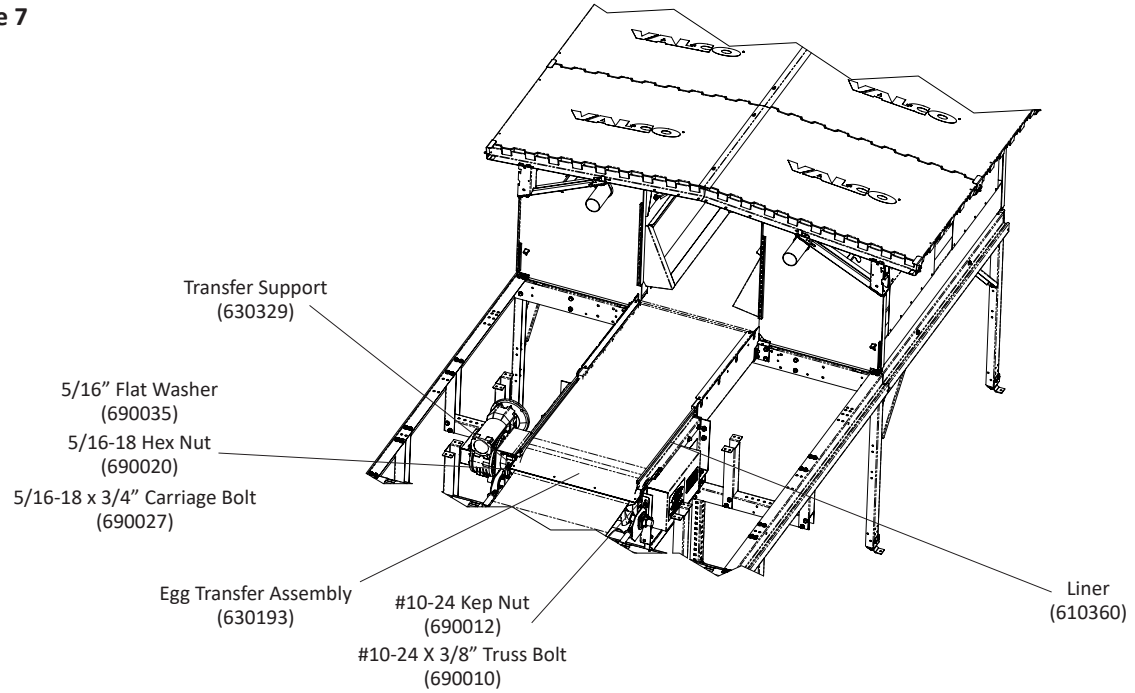


7. Install the floor supports, support stabilizers, and cross supports using the 1/4-20 hardware shown in Figure 8.

**Figure 8**

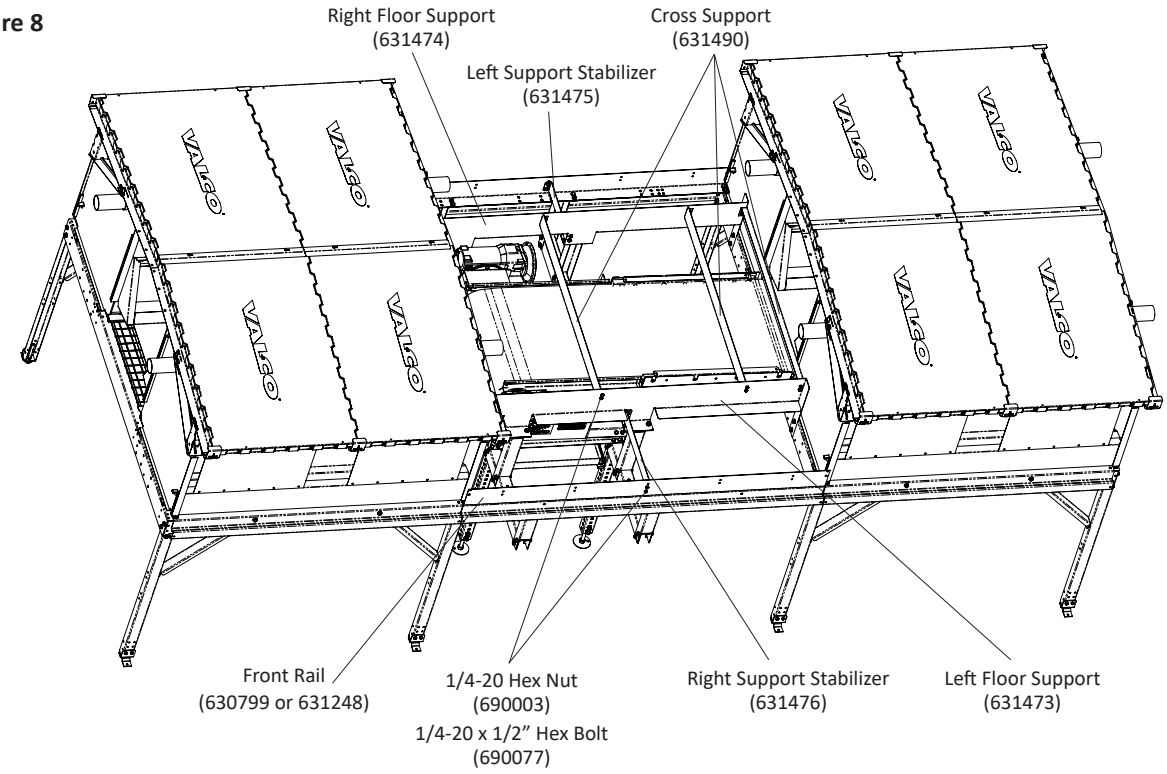




©2026 Valco Industries, Inc.

8. Install the floor slats as shown in Figure 9 to complete the installation of the belt transfer.

**Figure 9**

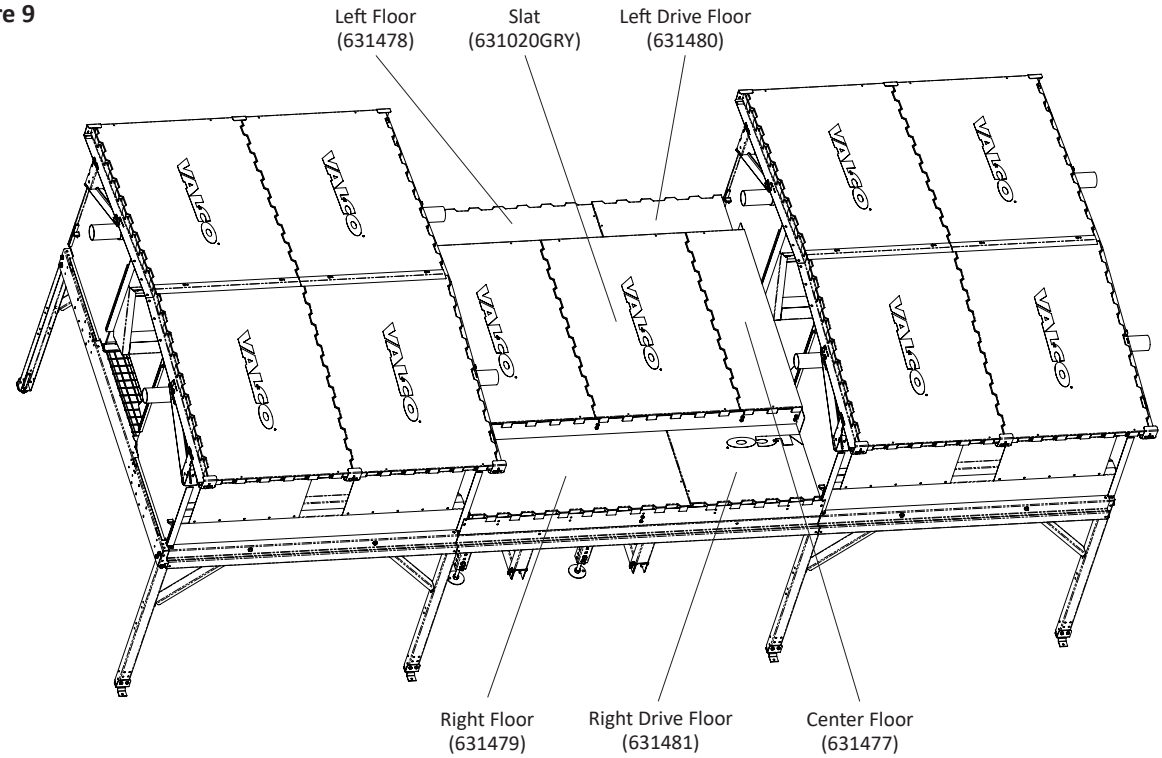


©2026 Valco Industries, Inc.

# Freedom Nest Belt Transfer (631721, 631722) - Exploded Parts Drawing

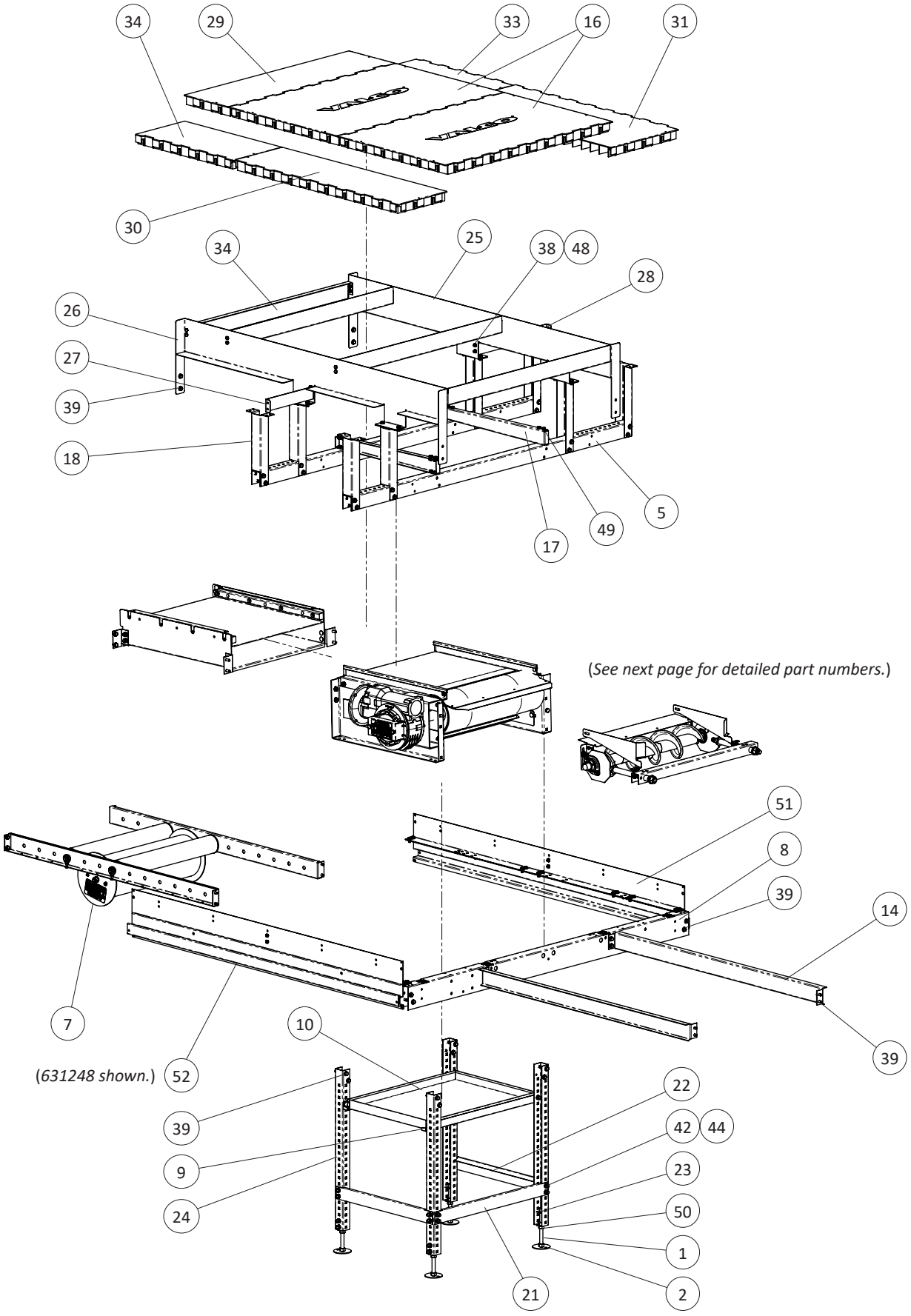




©2026 Valco Industries, Inc.

## Freedom Nest Belt Transfer (631721, 631722) - Exploded Parts Drawing - continued

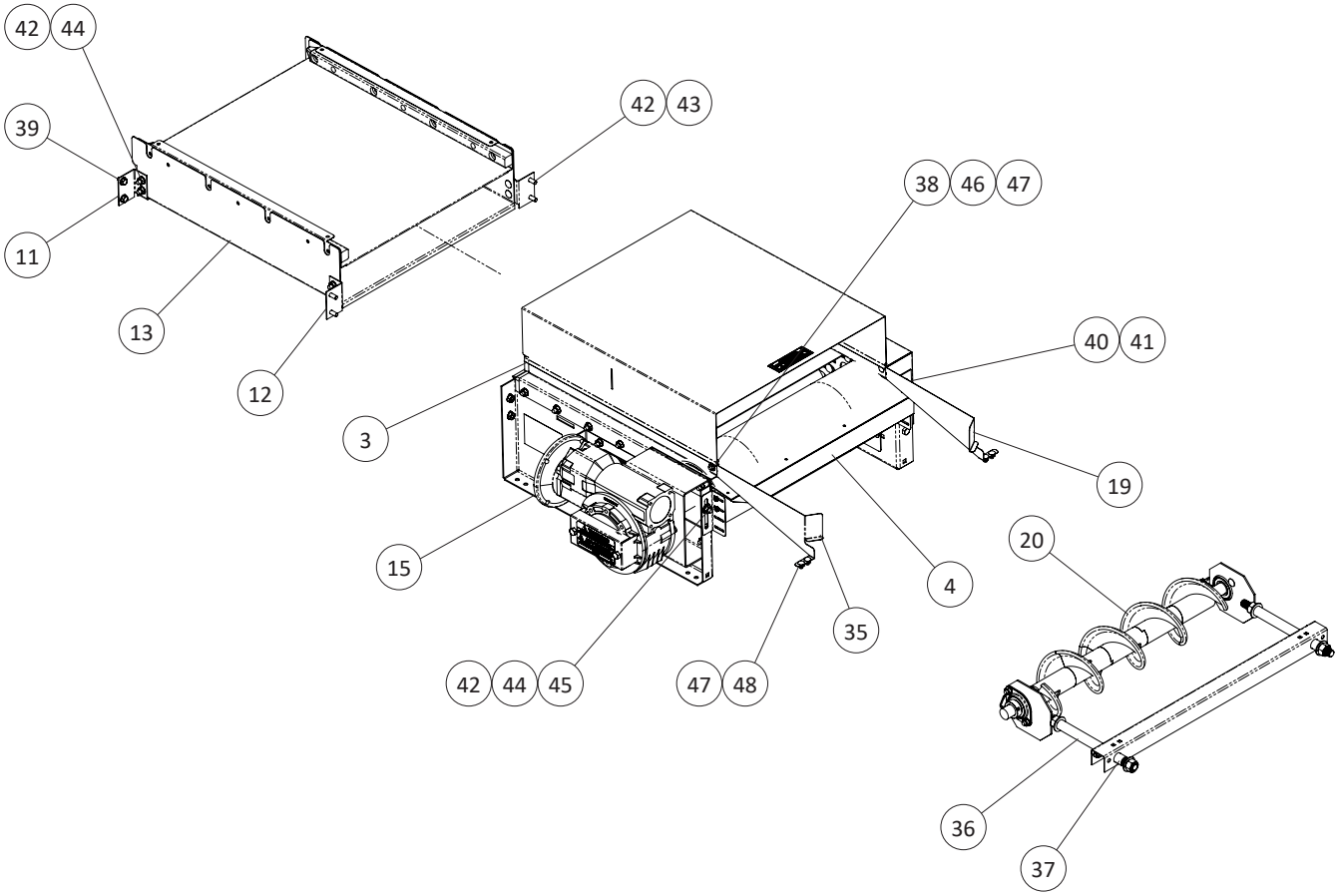


©2026 Valco Industries, Inc.

# Freedom Nest Belt Transfer (631721, 631722) - Parts List

| ITEM # | PART # | QTY | DESCRIPTION |
|---|---|---|---|
| **FREEDOM NEST BELT TRANSFER** *(common parts)* | | | |
| 1 | 410895 | 4 | LEG ADJUSTMENT, TABLE |
| 2 | 410897 | 4 | FOOT ASSEMBLY W/NUT |
| 3 | 610360 | 2 | LINER, CURTAIN HOLDER, 8’ |
| 4 | 630193 | 1 | EGG TRANSFER ASSEMBLY, 21.73” |
| 5 | 630195 | 2 | FRONT CROSS BRACE SUPPORT |
| 6 | 630329 | 2 | EGG TRANSFER SUPPORT |
| 7 | 630530 | 1 | EGG BELT TAKE-UP ASSEMBLY |
| 8 | 630533 | 1 | IDLER CROSS SUPPORT |
| 9 | 630557 | 2 | TRAY SUPPORT, EGG BELT DRIVE |
| 10 | 630558 | 1 | REFUSE TRAY, 18” X 24” X 1.5” |
| 11 | 630591 | 2 | LH BRACKET, EGG BELT |
| 12 | 630592 | 2 | RH BRACKET, EGG BELT |
| 13 | 630594 | 1 | EGG BELT ASSEMBLY, FEOR-DR, 24” |
| 14 | 630650 | 2 | SUPPORT CHANNEL, EGG BELT IDLER |
| 15 | 630855 | 1 | EGG BELT DRIVE |
| 16 | 631020GRY | 2 | SOLID SLAT, RAL 7004-GRAY |
| 17 | 631234 | 2 | ANGLE, INLINE EGG BELT TRANSFER |
| 18 | 631235 | 8 | CHANNEL, INLINE EGG BELT TRANSFER |
| 19 | 631236 | 1 | LEFT GUARD, EGG BUMPER |
| 20 | 631275 | 1 | EGG BELT IDLER ASSEMBLY |
| 21 | 631378 | 1 | CROSS BRACE, F/B, EGG BELT DRIVE |
| 22 | 631379 | 2 | CROSS BRACE, SIDE, EGG BELT DRIVE |
| 23 | 631387 | 4 | FOOT BRACKET, EGG DRIVE |
| 24 | 631409 | 4 | NEST LEG, EGG DRIVE, 36” |
| 25 | 631473 | 1 | LEFT FLOOR SUPPORT |
| 26 | 631474 | 1 | RIGHT FLOOR SUPPORT |
| 27 | 631475 | 1 | LEFT SUPPORT STABILIZER |
| 28 | 631476 | 1 | RIGHT SUPPORT STABILIZER |

| ITEM # | PART # | QTY | DESCRIPTION |
|---|---|---|---|
| **FREEDOM NEST BELT TRANSFER** *(common parts)* | | | |
| 29 | 631477 | 1 | CENTER FLOOR, INLINE, TRANSFER |
| 30 | 631478 | 1 | LEFT FLOOR, INLINE, TRANSFER |
| 31 | 631479 | 1 | RIGHT FLOOR, INLINE, TRANSFER |
| 32 | 631480 | 1 | LEFT DRIVE FLOOR, INLINE, TRANSFER |
| 33 | 631481 | 1 | RIGHT DRIVE FLOOR, INLINE, TRANSFER |
| 34 | 631490 | 4 | CROSS SUPPORT, INLINE TRANSFER |
| 35 | 631615 | 1 | RIGHT GUARD, EGG BUMPER |
| 36 | 631744 | 2 | SPACER, IDLER, 5.151” |
| 37 | 631746 | 2 | SPACER, IDLER, 2.313” |
| 38 | 690003 | 30 | 1/4-20 K-LOCK HEX NUT |
| 39 | 690005 | 108 | 5/16-18 X 1/2” HEX SCREW |
| 40 | 690010 | 4 | #10-24 X 3/8” TRUSS BOLT |
| 41 | 690012 | 4 | #10-24 K-LOCK HEX NUT |
| 42 | 690020 | 54 | 5/16-18 K-LOCK HEX NUT |
| 43 | 690024 | 4 | 5/16-18 X 3/4” HEX SCREW |
| 44 | 690027 | 34 | 5/16-18 X 3/4” CARRIAGE SCREW |
| 45 | 690035 | 2 | 5/16” FLAT WASHER |
| 46 | 690038 | 2 | 1/4” FLAT WASHER |
| 47 | 690058 | 6 | 1/4-20 X 1/2” CARRIAGE SCREW |
| 48 | 690077 | 24 | 1/4-20 X 1/2”HEX BOLT |
| 49 | 690215 | 16 | 5/16-18 X 1/2” HEX BOLT |
| 50 | 690227 | 8 | 1/2-13 HEX NUT |
| **FREEDOM NEST BELT TRANSFER (631721)** | | | |
| 51 | 630799 | 2 | FRONT RAIL, WINCHING, 5’ |
| 52 | 630799 | 2 | FRONT RAIL, WINCHING, 5’ |
| **FREEDOM NEST BELT TRANSFER (631722)** | | | |
| 51 | 630799 | 2 | FRONT RAIL, WINCHING, 5’ |
| 52 | 631248 | 2 | FRONT RAIL, WITH SLAT RIDGE |