Outside Belt Table Extension
417139
Quicksheet

Outside Belt Table Extension - Assembly Instructions

The Outside Belt Table Extension arrives unassembled from the factory and must be properly pre-assembled before installation to an existing egg collector. Please follow the step by step instructions below.

NOTE: The Outside Belt Table Extension kit is sold containing enough components to make two tables (potentially a left and a right table). The assembly instructions are the same for each, as all the components are symmetrical. Therefore, these instructions only show the assembly of **one** side table.

STEP 1: Assemble upper (417141) and lower (417142) legs, using (2) each of 5/16-18 x 3/4" hex bolts (010643), 5/16-18 flat washers (010426), 5/16-18 lock washers (010252), and 5/16-18 hex nuts (010603), as shown in Figure 1.

Once upper and lower legs are assembled, attach feet to each set of assembled legs. Use (1) 1/2-13 hex nut (011117) to secure (1) leveling foot pad (412118) to each lower leg, as shown in Figure 1.

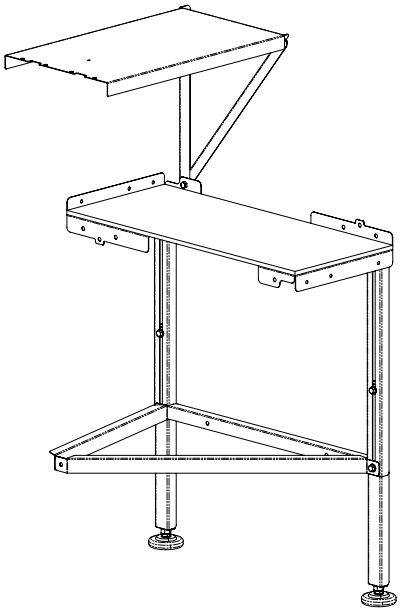

Outside Belt Table Extension (417139)
(*Fully Pre-assembled*)

Figure 1

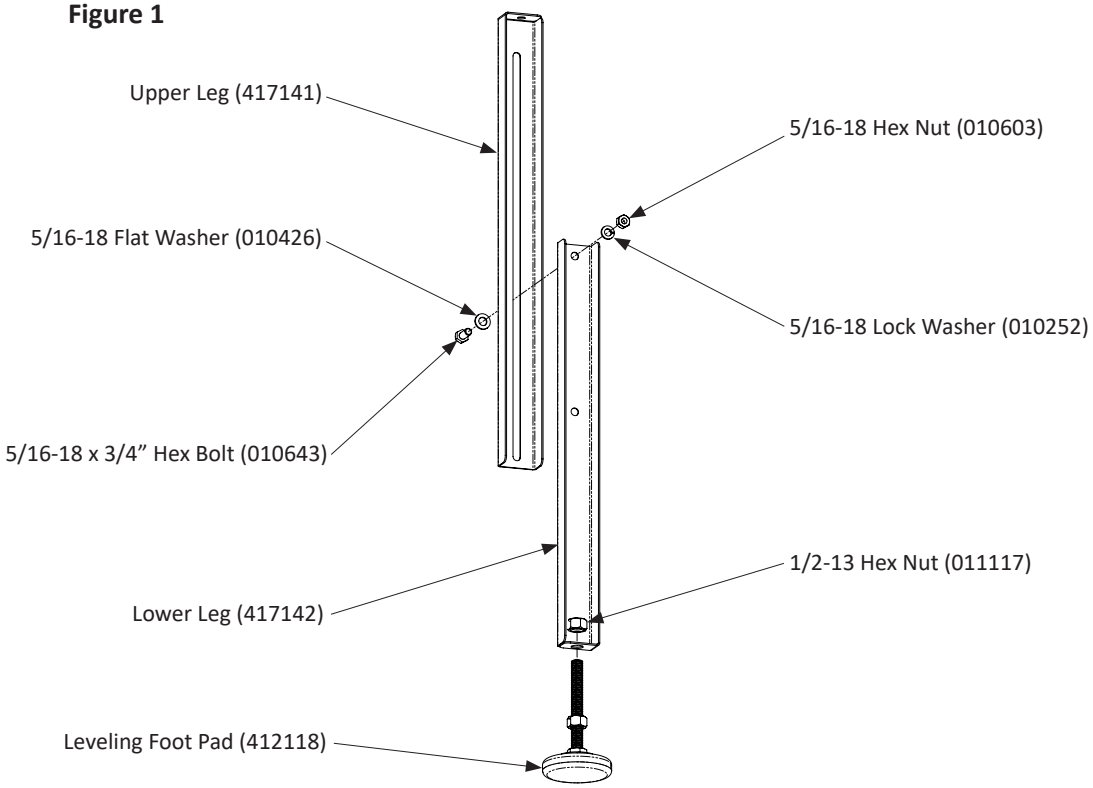

©2026 Valco Industries, Inc.

Outside Belt Table Extension - Assembly Instructions (continued)

STEP 2: Assemble extension strut (417146) and short strut (417150) to cross brace (417145) and upper and lower legs, using (2) each of 5/16-18 x 3/4" hex bolts (010643), 5/16-18 flat washers (010426), 5/16-18 lock washers (010252), and 5/16-18 hex nuts (010603), as shown in Figure 2.

Figure 2

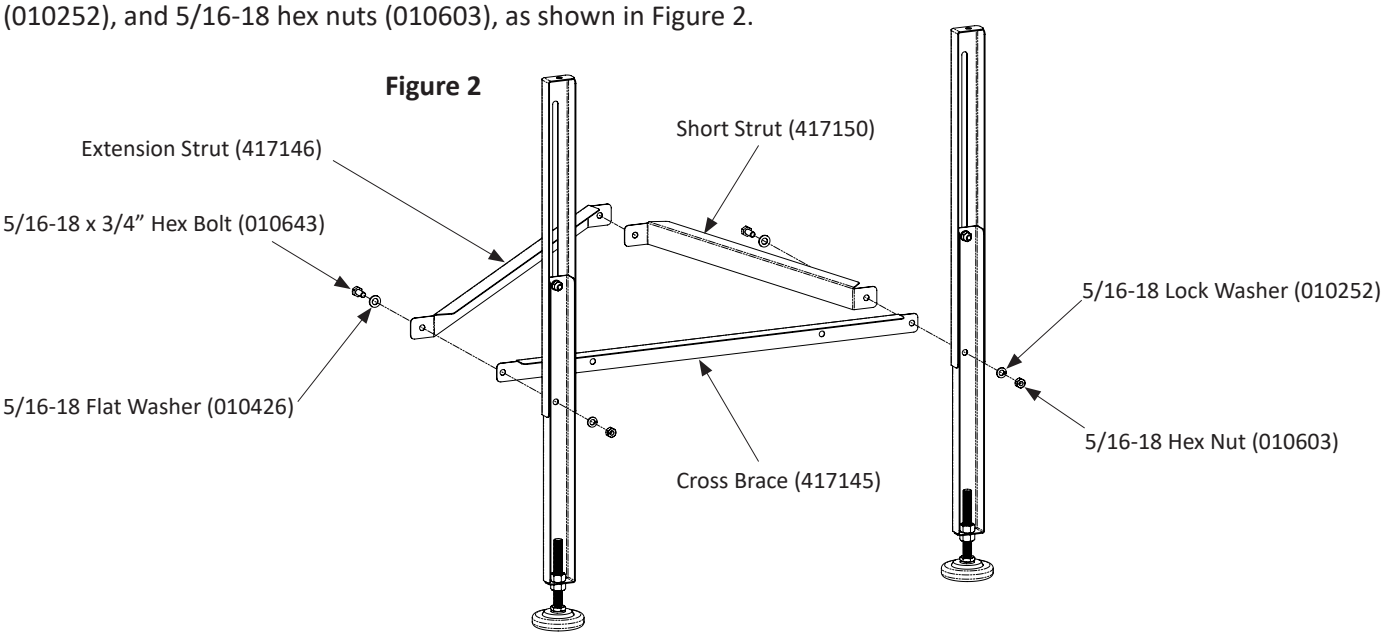

STEP 3: Assemble (1) rack angle (417149) to extension table (417140), using (2) each of 5/16-18 x 3/4" truss bolts (010542), 5/16-18 lock washers (010252), and 5/16-18 hex nuts (010603). Then assemble table top to upper and lower legs, using (2) each of 5/16-18 x 3/4" truss bolts (010542), 5/16-18 lock washers (010252), and 5/16-18 hex nuts (010603), as shown in Figure 3.

NOTE: The extended tab on the exterior flange of the extension table must be **up** and to the **front** of the egg collector, while the front flange of the extension table must be **down** and to the **front** of the egg collector, as shown in Figure 3. This assembly orientation is mirrored from one side to the other with each table extension.

Figure 3

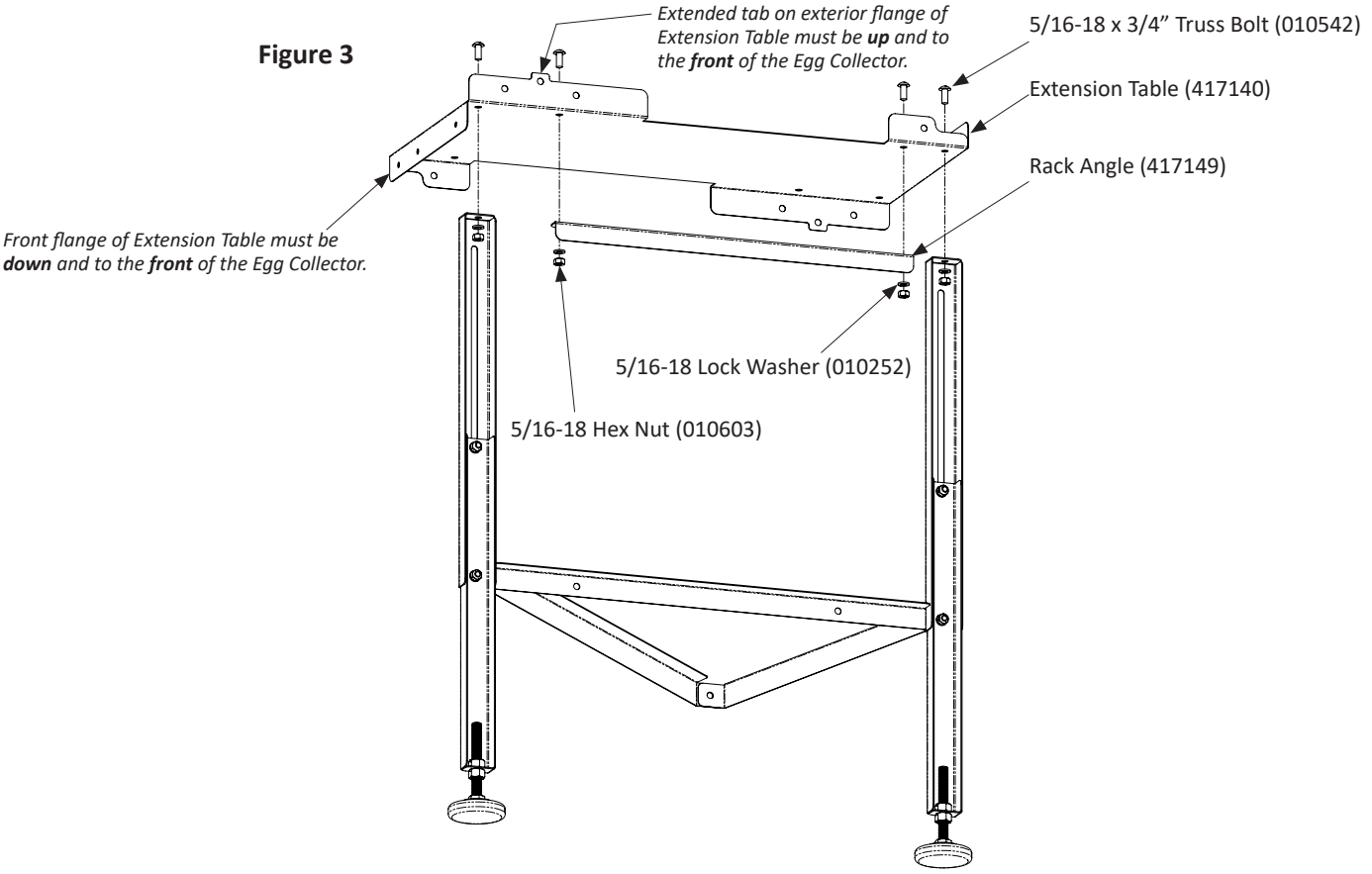

©2026 Valco Industries, Inc.

STEP 4: Assemble rack strut (417148 - approximately 16.5” long) and rack angle (417149 - approximately 20” long) to the extension table, using (1) 5/16-18 x 3/4” hex bolt (010643), 5/16-18 lock washer (010252), and 5/16-18 hex nut (010603), as shown in Figure 4.

STEP 5: Assemble extension rack (417147) to rack strut and rack angle, using (2) each of 5/16-18 x 3/4” hex bolts (010643), 5/16-18 lock washers (010252), and 5/16-18 hex nuts (010603), as shown in Figure 4.

Figure 4

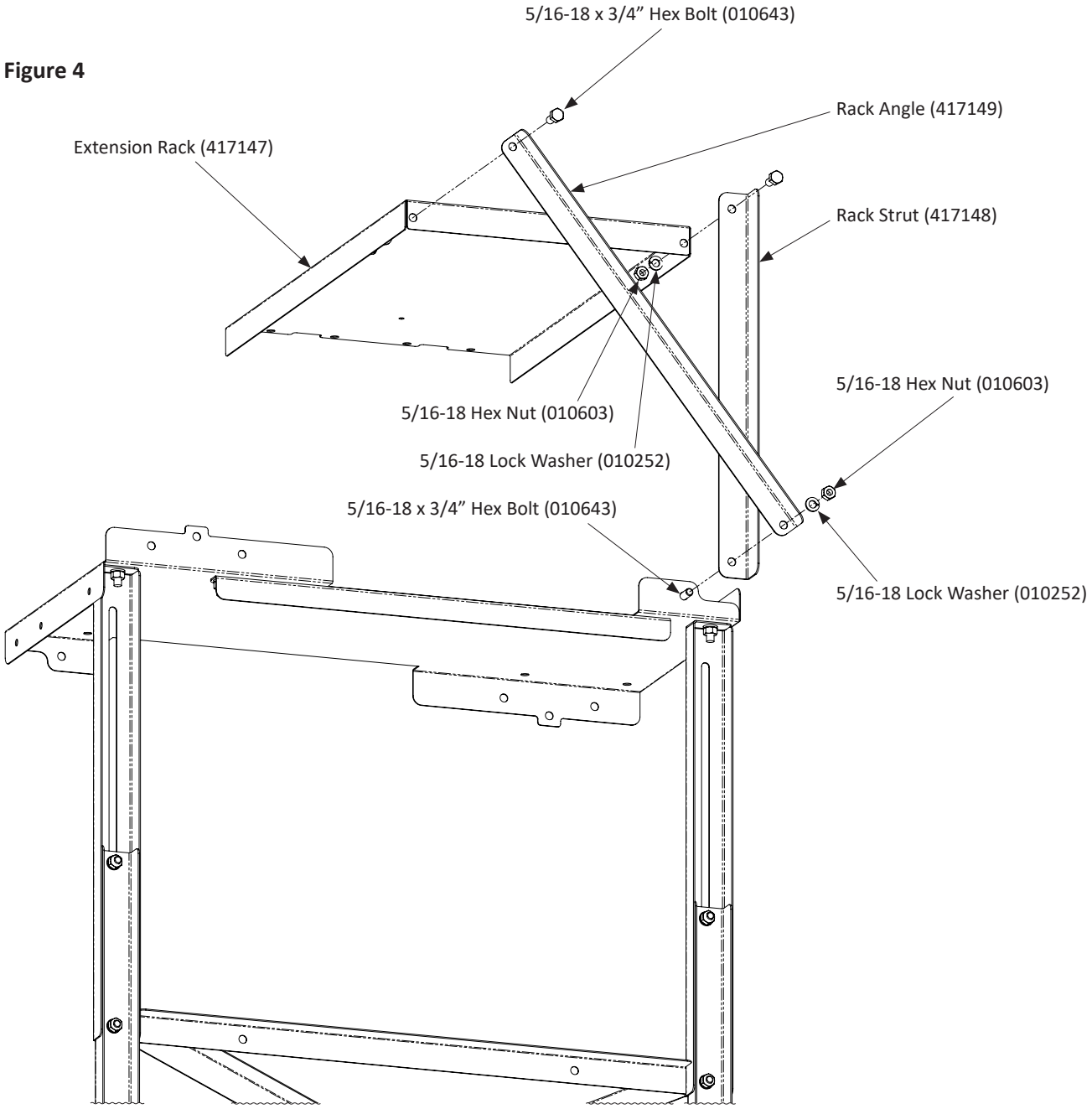

©2026 Valco Industries, Inc.

Outside Belt Table Extension - Installation Instructions

STEP 6: Before assembling the table extension to the egg collector, remove (2) side mounted egg guide brackets (412646) from the egg collector collection table, (1) 3/8-16 x 1-1/4" hex bolt (010666) from the base of the egg belt drive leg cover, and (2) cable clamps (412665), and (1) VFD support bracket (412707) from the top rack of the egg collector, along with all associated hardware, as shown in Figure 5. Set all items and hardware aside. Some items will be reused to assemble the table extension to the egg collector.

Remove all items and associated hardware shown below.

Figure 5

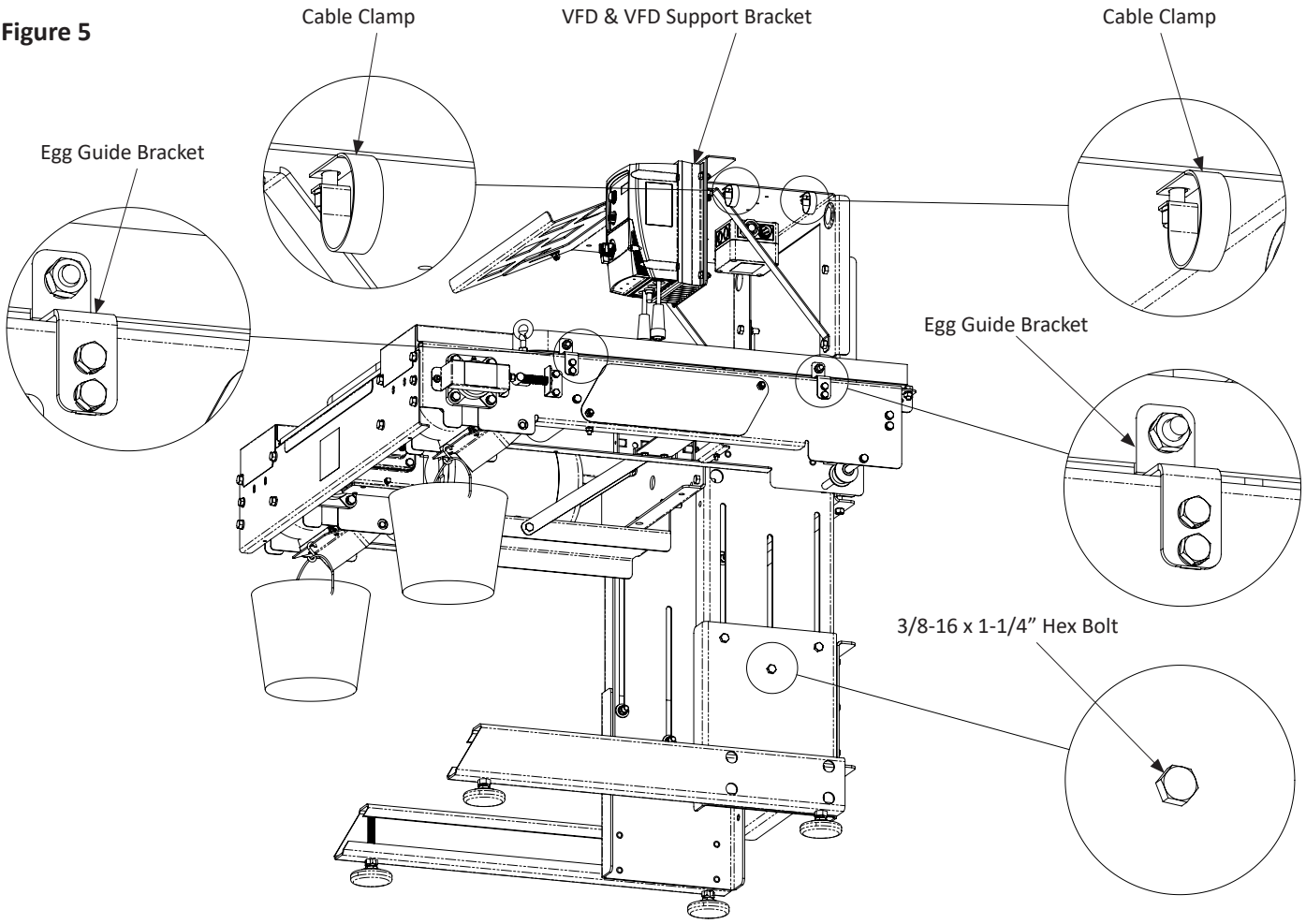

©2026 Valco Industries, Inc.

STEP 7: Slide assembled table extension over to egg collector and attach extension strut (417146) and short strut (417150) to the egg collector, reusing hardware from previously removed egg belt drive leg cover, as shown in Figures 6 & 7.

STEP 8: Assemble extension table (417140) to the egg collector, reusing hardware from previously removed egg guide brackets, as shown in Figures 6 & 7.

STEP 9: Assemble rack extension (417147) to the egg collector, reusing hardware from previously removed cable clamps, as shown in Figures 6 & 7.

Figure 6

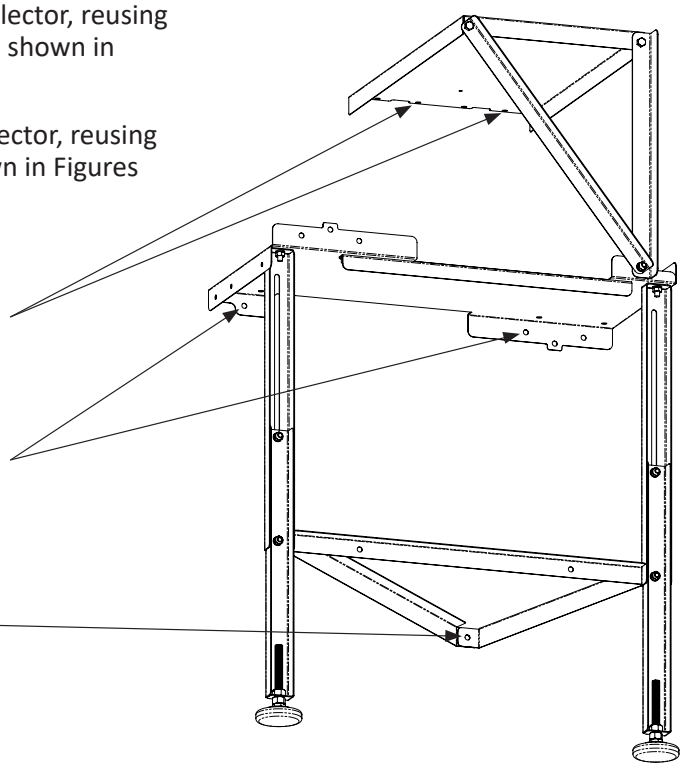

NOTE: Figure 6 shows the locations on the assembled table extension that connect to the existing egg collector. Figure 7 shows the table extension assembled to the egg collector.

Figure 7

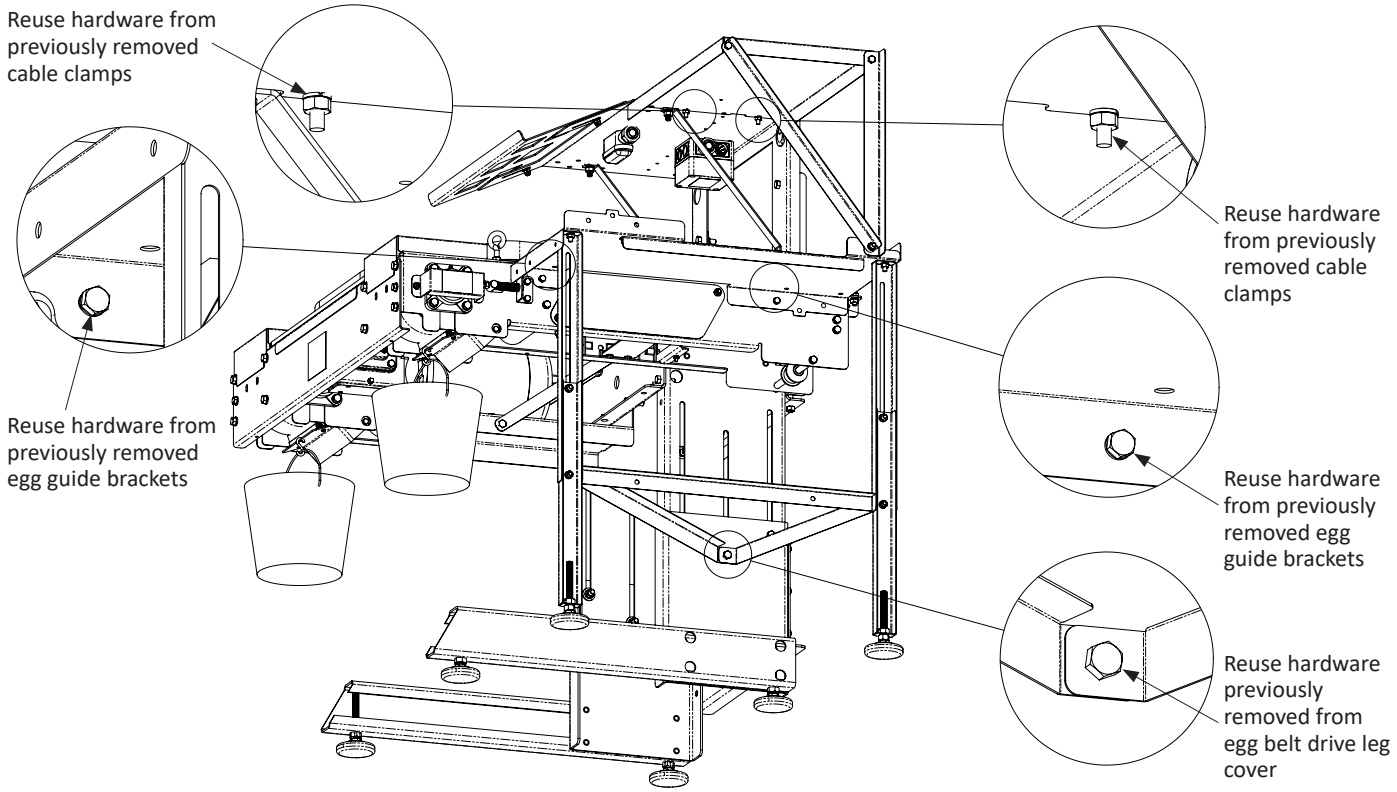

©2026 Valco Industries, Inc.

STEP 10: Relocate the previously removed VFD to the front of the extension table, reusing previously removed hardware to assemble, as shown in Figures 8 & 9.

NOTE: The VFD must be disassembled from the VFD support bracket in order to be assembled to the front of the extension table, and the VFD support bracket is not to be reused.

Figure 8

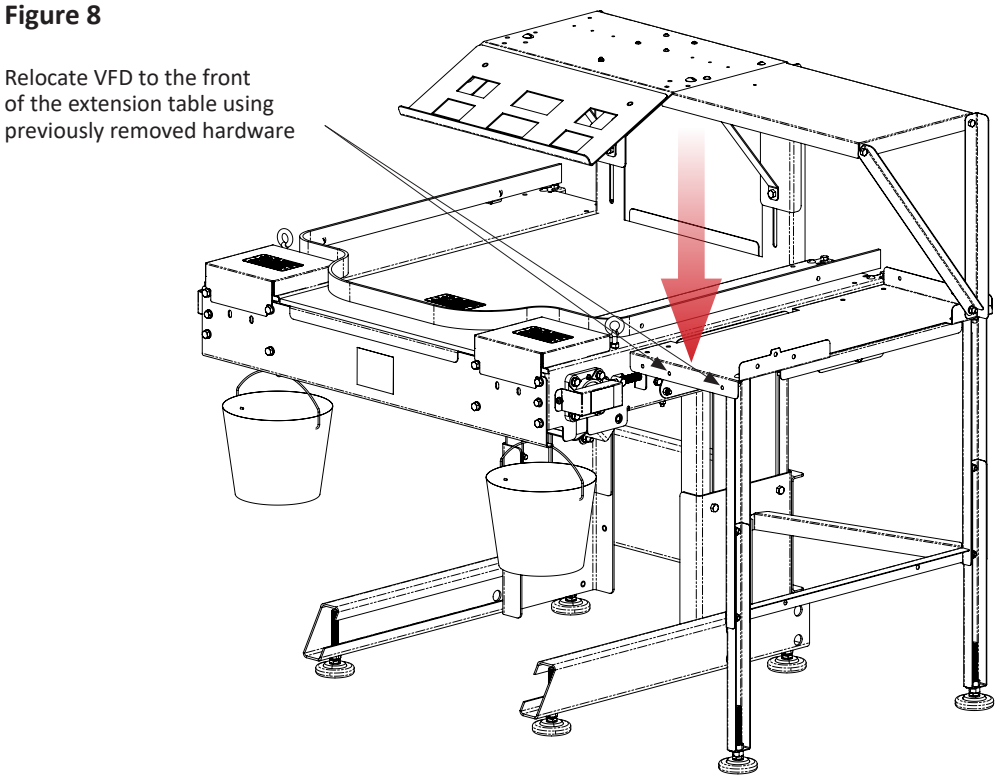

Figure 9

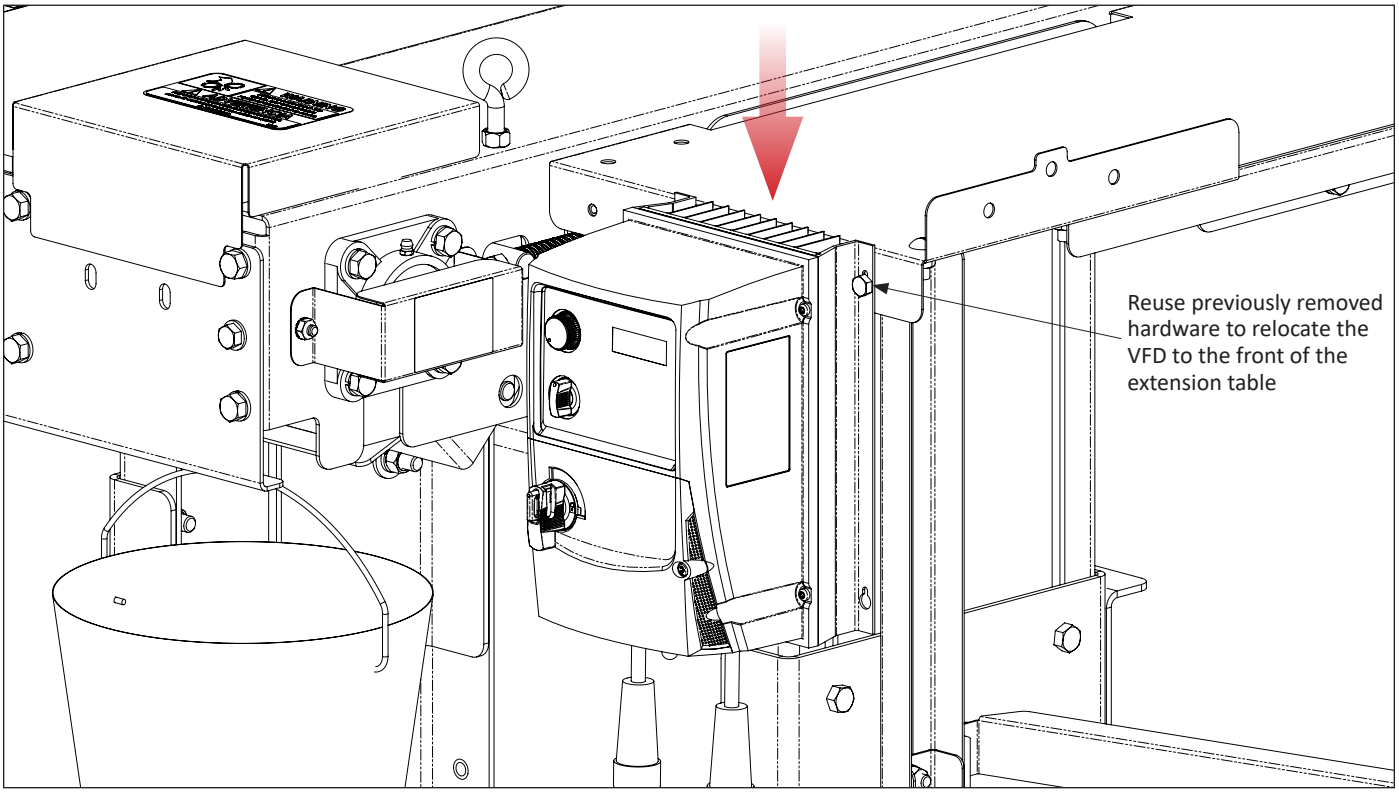

©2026 Valco Industries, Inc.

STEP 11: Relocate LED Light to the underside of the extension rack, reusing previously removed hardware, as shown in Figure 10.

NOTE: There is a second LED light in the extension table kit that needs to be added to the other extension table on the other side of the egg collection table. It is to be wired into the junction box under the original table rack.

Figure 10

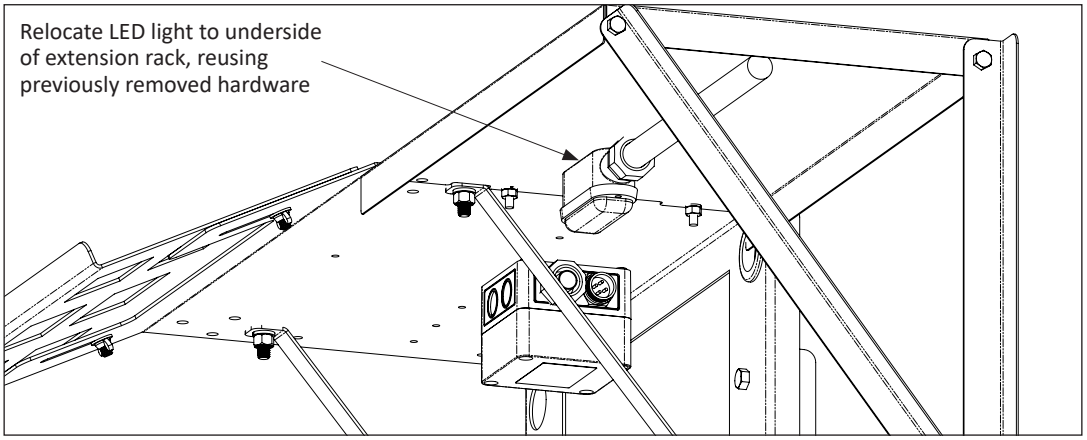

STEP 12: Reinstall (1) reused egg guide bracket with previously removed hardware, as shown in Figure 11. Then unbolt the far edge of the plastic bumper trim and stretch it over and around to the outside of the side extension table, redrilling the plastic where needed, and reusing the previously removed hardware to attach it to the extension table side flange.

STEP 13: Place mat (417143) on extension table, as shown in Figure 11.

STEP 14: Place vinyl edge trim (425054) on extension table side flange, wrapping it over the end tab to complete installation, as shown in Figure 11.

Figure 11

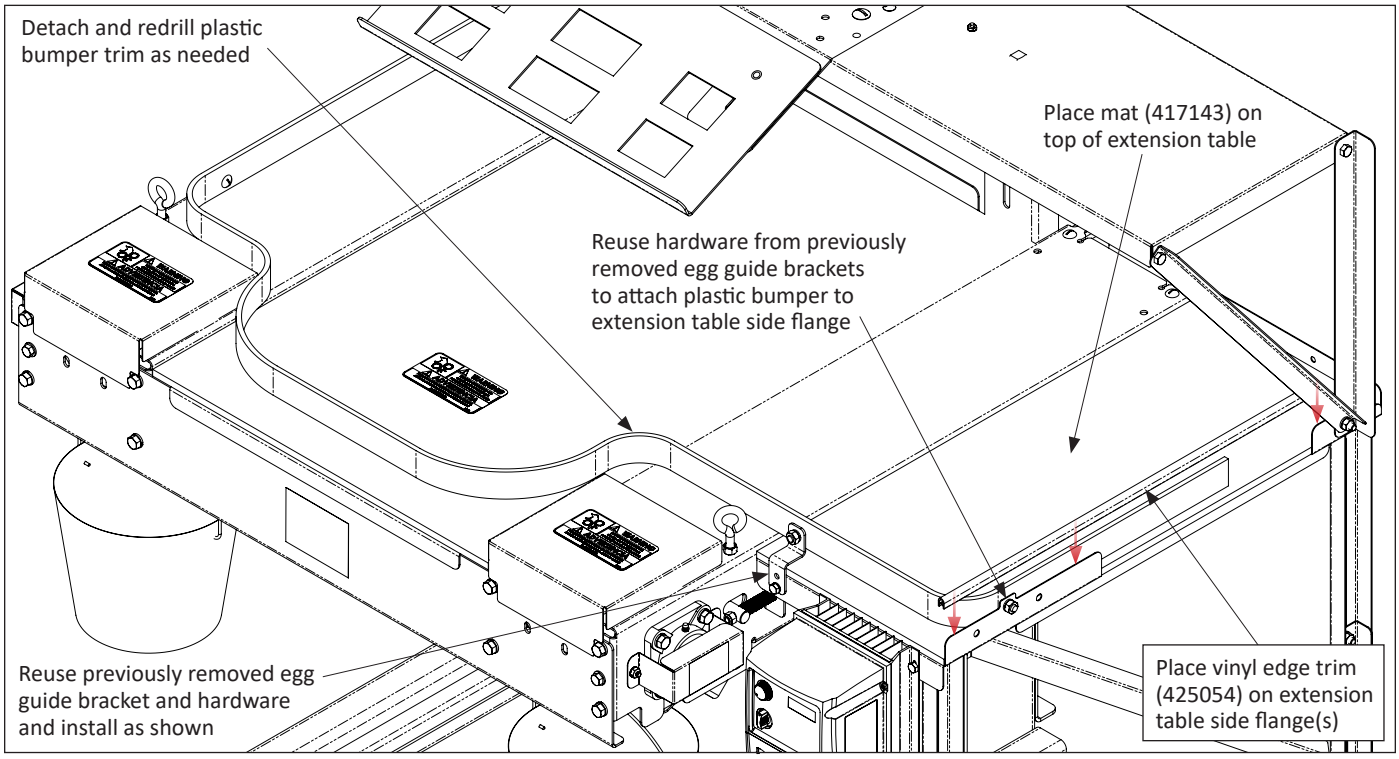

NOTE: (1) Table extension can be placed on (1) side of an egg collector and the other table extension can be placed on the opposite side of a second egg collector. Please use the same assembly and installation instructions, understanding that assembly orientations will be mirrored from left to right.

©2026 Valco Industries, Inc.

Wiring Schematic - Collection Table, 230V, VFD

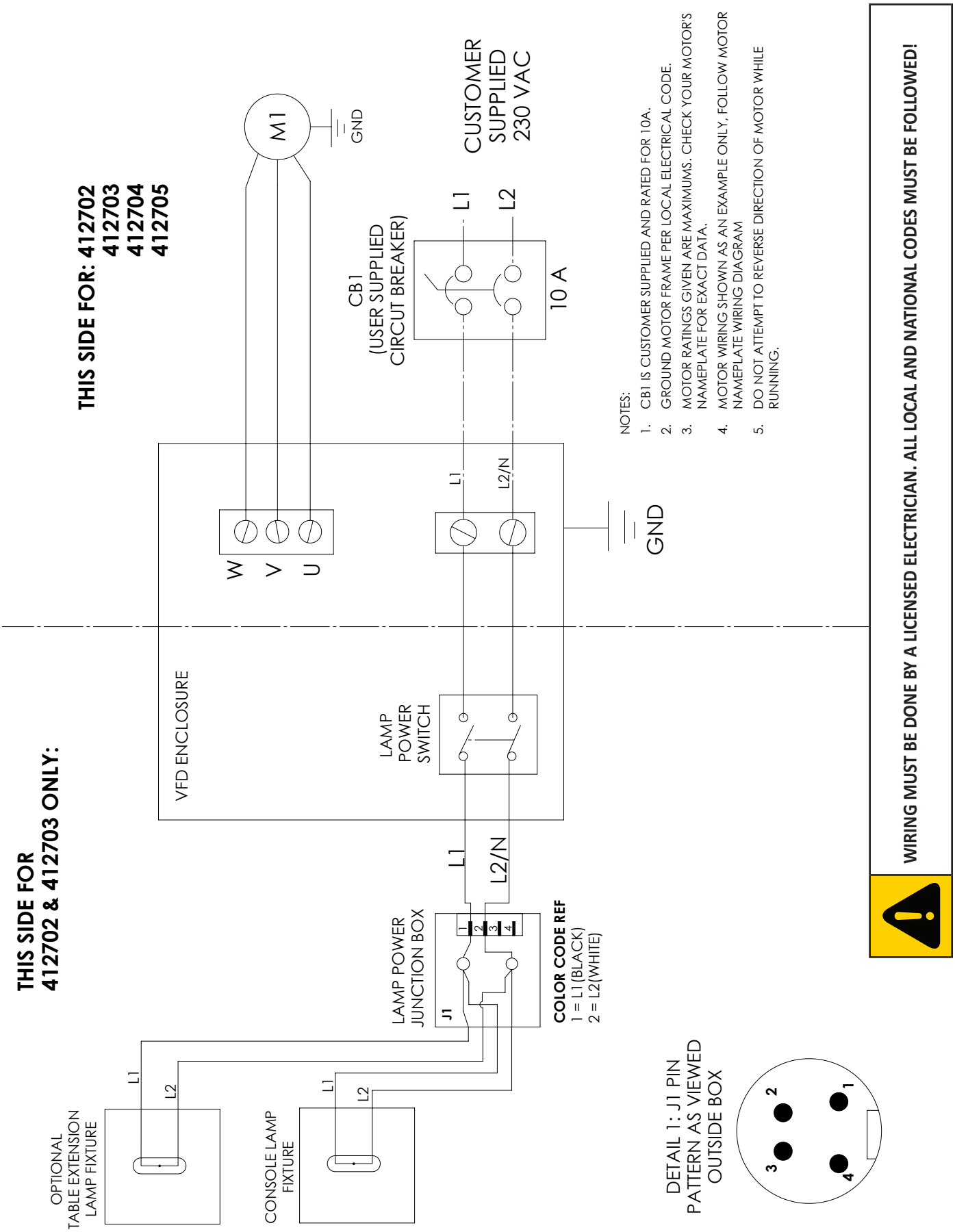

©2026 Valco Industries, Inc.

Outside Belt Table Extension (417139) - Exploded Drawing and Parts List

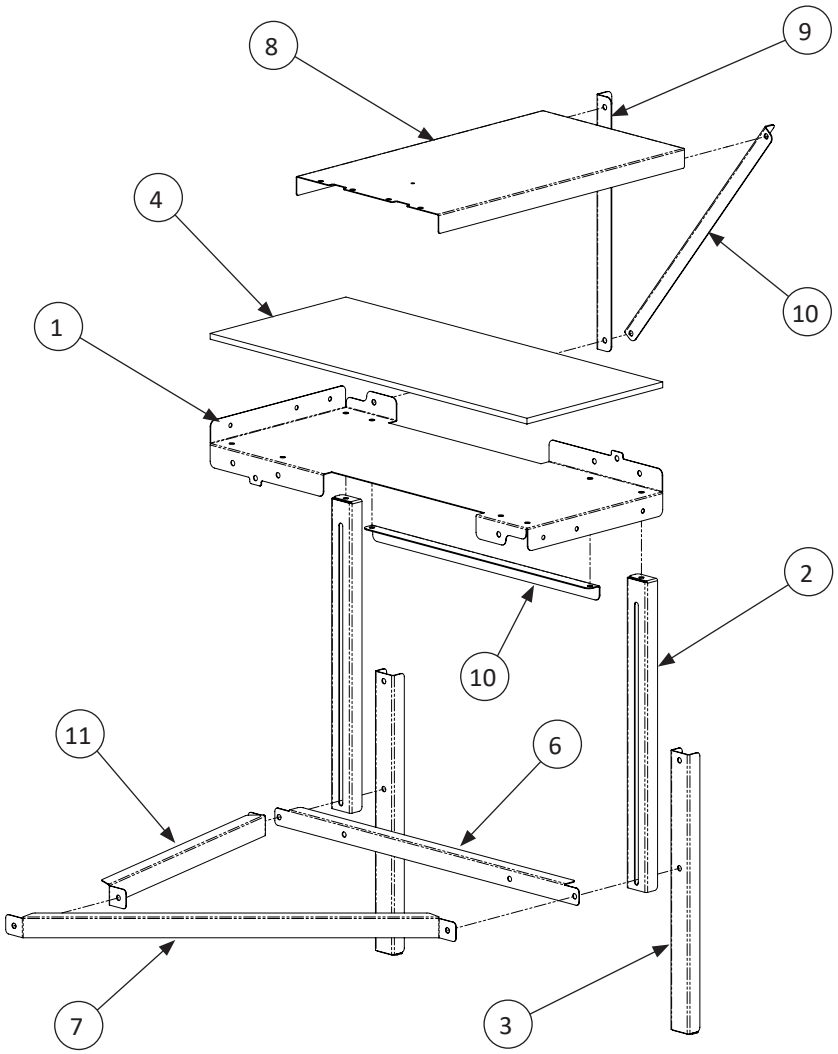

KEY	PART #	DESCRIPTION	QTY
OUTSIDE BELT TABLE EXTENSION (417139)			
1	417140	EXTENSION TABLE, EXTENSION KIT	2
2	417141	UPPER LEG, EXTENSION KIT	4
3	417142	LOWER LEG, EXTENSION KIT	4
4	417143	MAT, EXTENSION KIT	2
5	417144	HARDWARE BAG, EXTENSION KIT	1
6	417145	CROSS BRACE, EXTENSION KIT	2
7	417146	EXTENSION STRUT, EXTENSION KIT	2
8	417147	EXTENSION RACK, EXTENSION KIT	2
9	417148	RACK STRUT, EXTENSION KIT	2
10	417149	RACK ANGLE, EXTENSION KIT	4
11	417150	SHORT STRUT, EXTENSION KIT	2

©2026 Valco Industries, Inc.

Outside Belt Table Extension Hardware Bag (417144) - Drawing and Parts List

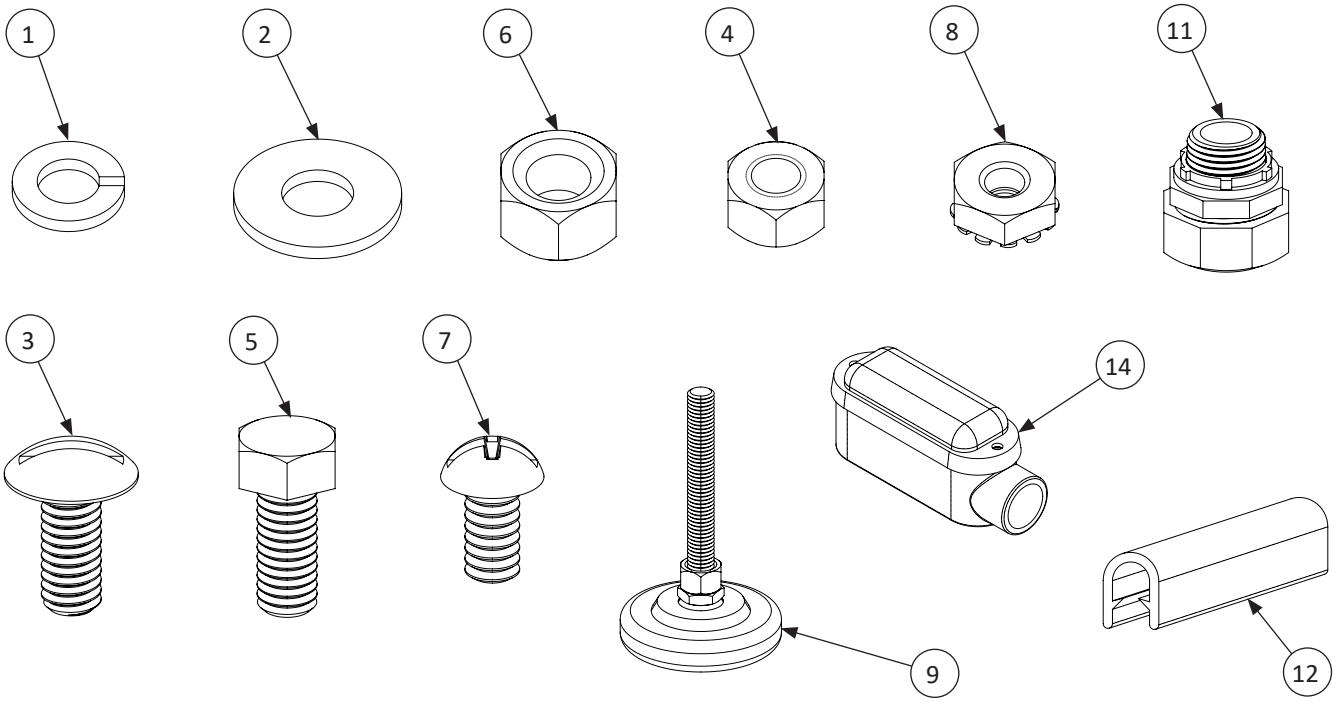

KEY	PART #	DESCRIPTION	QTY
HARDWARE BAG, EXTENSION KIT (417144)			
1	010252	5/16” LOCK WASHER	27
2	010426	5/16” FLAT WASHER	11
3	010542	5/16-18 X 3/4” TRUSS BOLT	11
4	010603	5/16-18 HEX NUT	27
5	010643	5/16-18 X 3/4” HEX BOLT	17
6	011117	1/2-13 HEX NUT	4
7	011122	#10-24 X 3/8” ROUND HEAD BOLT	2
8	012408	#10-24 K-LOCK HEX NUT	2
9	412118	LEVELING FOOT PAD	4
10	425044	1/2” BLACK FLEXIBLE TUBING	1
11	425046	1/2” CONDUIT CONNECTOR	2
12	425054	VINYL EDGE TRIM	6.5
13	450460	ORANGE WIRE NUT	2
14	820165	LED LIGHT, 200LU, 230V, 50/60HZ	1
15	870001	PLASTIC BAG	1
16	SPE-000-1060	#16 WIRE, BLACK	3.25

NOTE: *Items 10, 13, 15, 16 are not shown. Items in drawing are **not** to scale.*

North America:
Phone: 800.99VALCO; 800.998.2526
Fax: 419.678.2200
Email: sales@val-co.com

International:
Phone: (+1) 419.678.8731
Fax: (+1) 419.678.2200
Email: intl.sales@val-co.com

©2026 Valco Industries, Inc.