Frameless 12” Inlet

810170, 810178, 810180, 810183, 810185, VAI12SWCI96K, VAI12SWSI96K

Installation Instructions

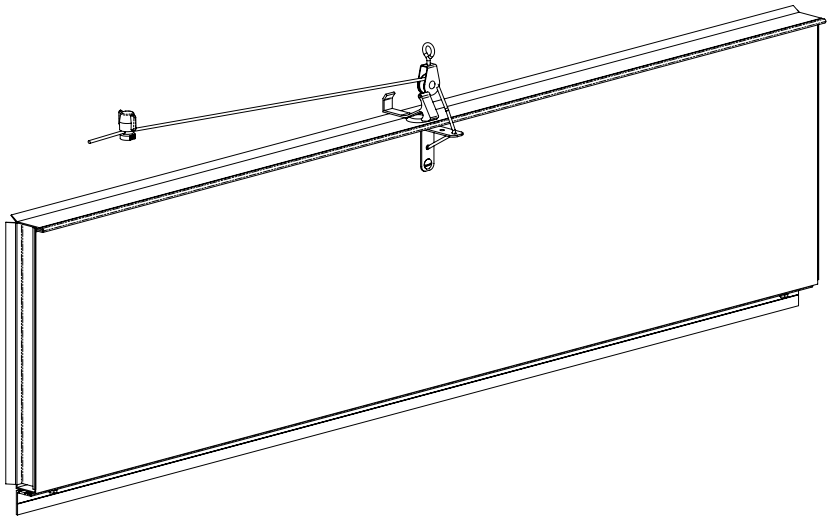

Tools Required for Installation

- Hammer
- Tape Measure
- Level
- Cordless Power Drill with 13/64” drill bit
- Circular Saw
- 1/4” and 5/16” Nut Driver
- 3/8” Socket with Socket Wrench
- Flat Head Screwdriver

Hammer



Tape Measure



Level



Cordless Power Drill



Circular Saw

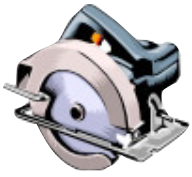

Nut Driver



Socket with Wrench

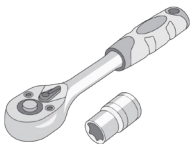

Flat Head Screwdriver



Preparing the Opening

1. Frame the opening for each inlet according to inlet size, as shown in the diagram and associated chart below.

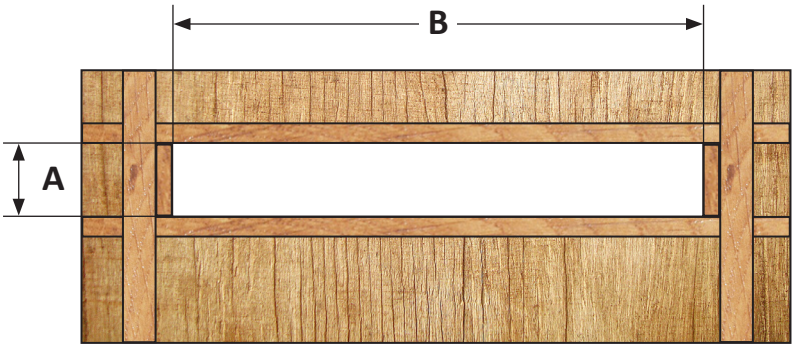

PART #	INLET TYPE	DIMENSION "A"	DIMENSION "B"
810170	Discrete	11.5" (29.2cm)	47.5" (120.6cm)
810183	Discrete	11.5" (29.2cm)	93.5" (237.5cm)
810185	Discrete	11.5" (29.2cm)	93.5" (237.5cm)
810178	Continuous	11.5" (29.2cm)	Total Length - 0.50" (1.3cm)
810180	Continuous	11.5" (29.2cm)	Total Length - 0.50" (1.3cm)
VAI12SWCI96K	Continuous	11.5" (29.2cm)	Total Length - 0.50" (1.3cm)
VAI12SWSI96K	Continuous	11.5" (29.2cm)	Total Length - 0.50" (1.3cm)

Inlet Frame Assembly

2. Drill inlet for cord brackets.

NOTE: Only one bracket needed for 810170, drilled in the center.

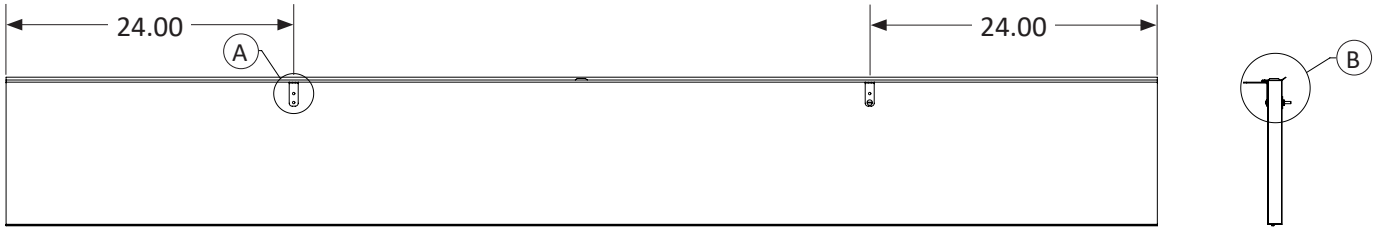

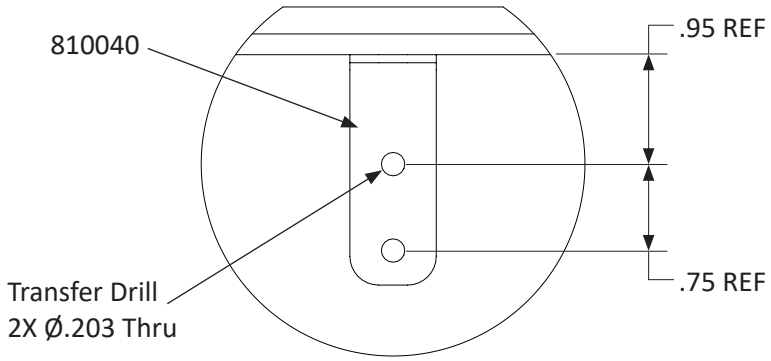

Detail A

©2026 Valco Industries, Inc.

Inlet Frame Assembly - continued

3. Install hardware as shown, after drilling inlet for cord brackets.

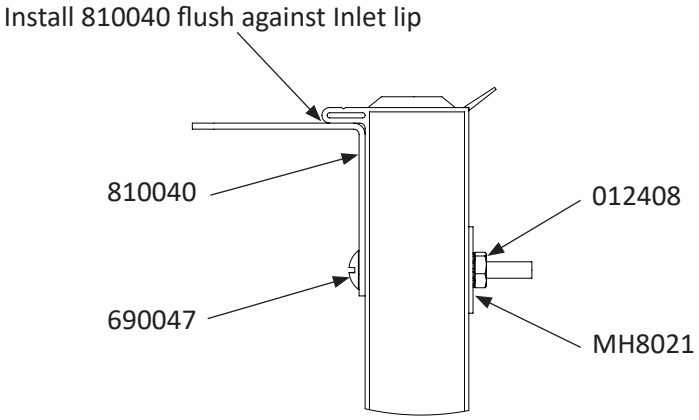

Detail B

NOTE:

For 810170, 810183, and 810185, skip to Step 5 and then Steps 9, 10 & 12 .

4. Cut end inlets (810180 or VAI12SWSI96K) into two pieces with a 90º angle cut.

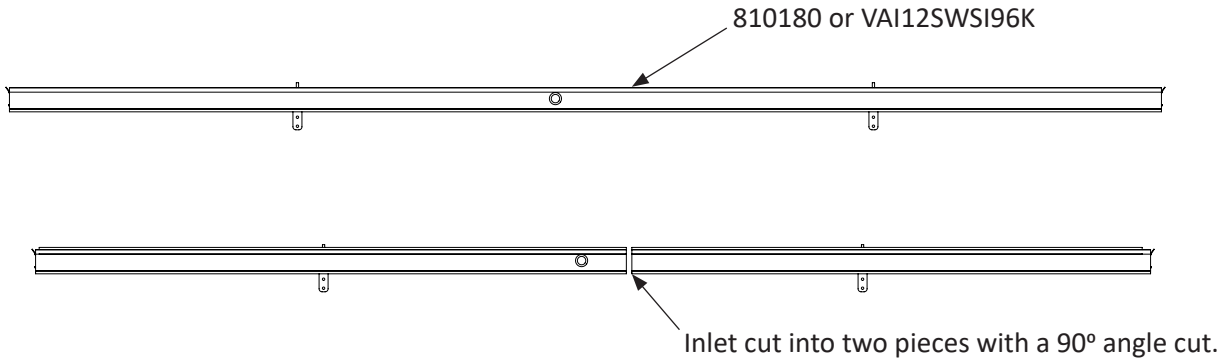

Overall layout view of inlet assembly.

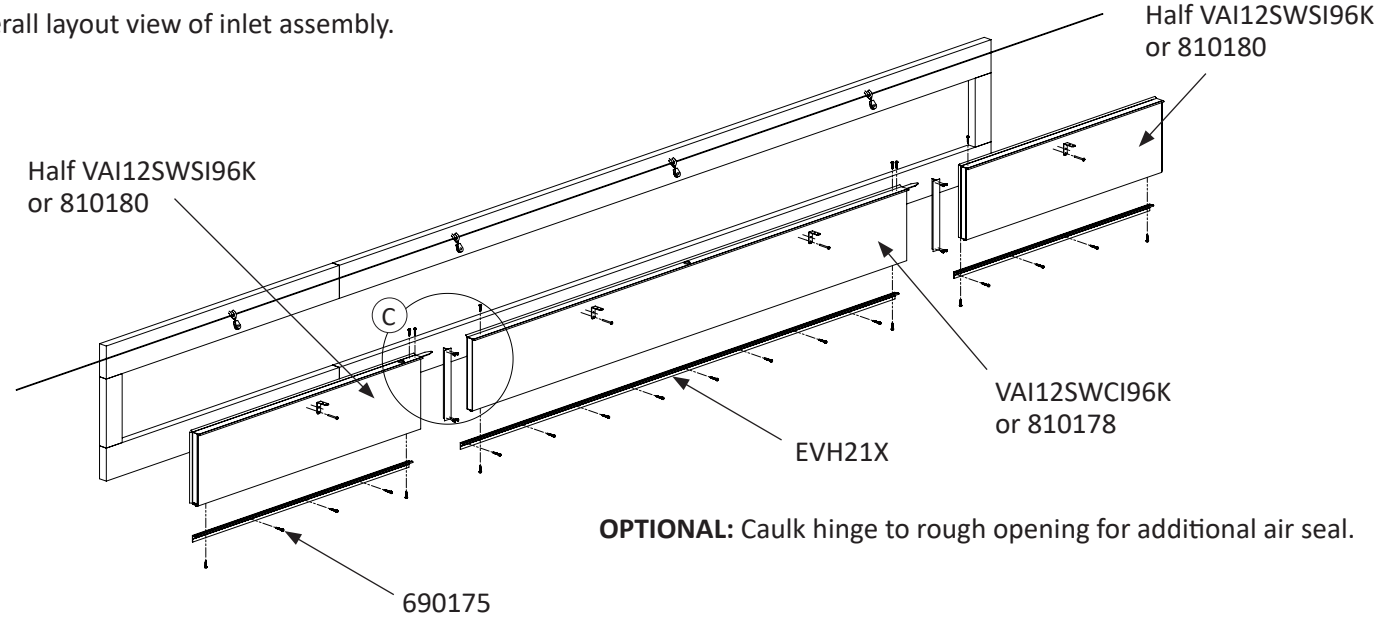

OPTIONAL: Caulk hinge to rough opening for additional air seal.

©2026 Valco Industries, Inc.

Inlet Frame Assembly - continued

5. Attach EVH21X hinge to rough opening using 690175 screws (sold separately) at 12” spacing, positioning the inlet 0.25” (6.35mm) below the opening. Position screw using detent in EVH21X hinge.

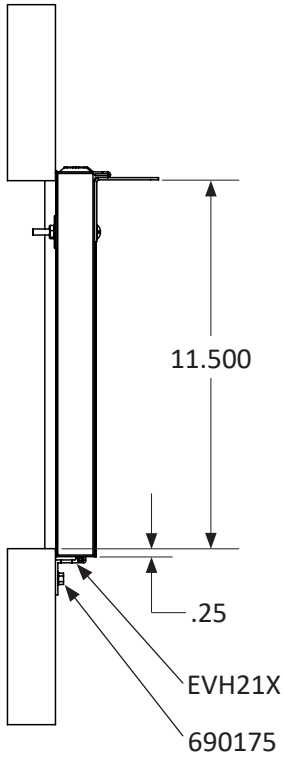

6. Slide half of 810168 connector into the top of the door and secure with (2) VAHXHDSCR10X1ZP screws.

7. Install (1) 810189 “T” connector to end of door using (2) 690359 screws as shown.

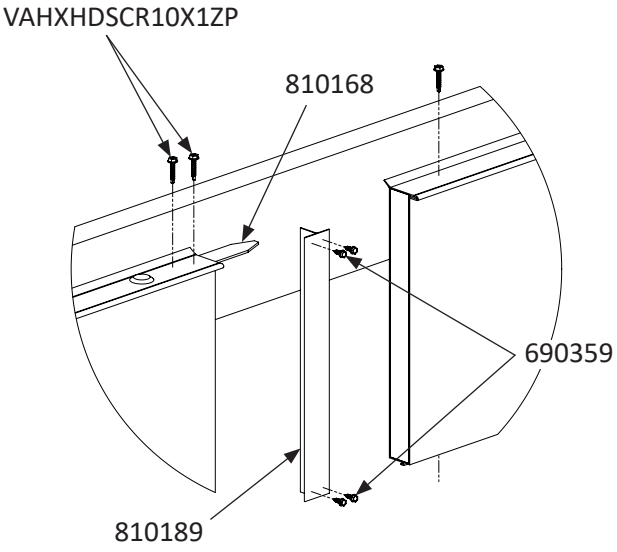

Detail C

8. Slide next door against first door and add one more VAHX-HDSCR10X1ZP screw and add in (2) more 690359 screws to “T” connector.

NOTE: Stagger hinge seam and door seam by at least 1.5”.

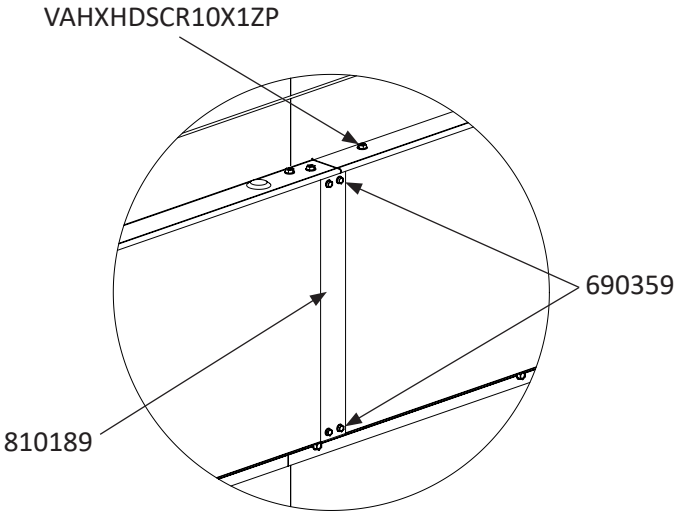

Detail C

(not exploded)

©2026 Valco Industries, Inc.

Inlet Frame Assembly - continued

9. Install hooks above each 810040 bracket, This will hold the VEN91104 pulley as well as the homerun line.

10. Route VD319 cord as shown.

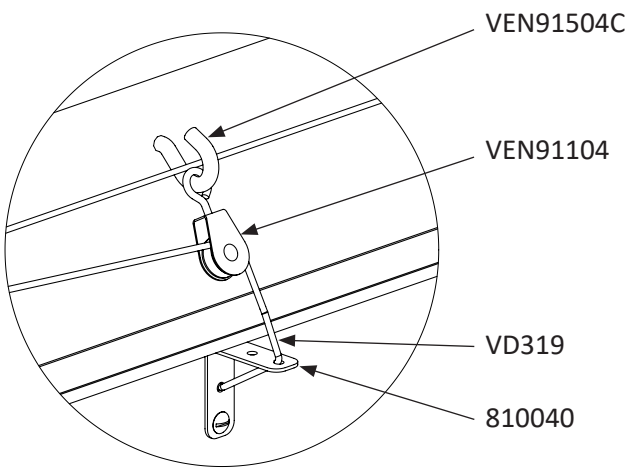

Detail D

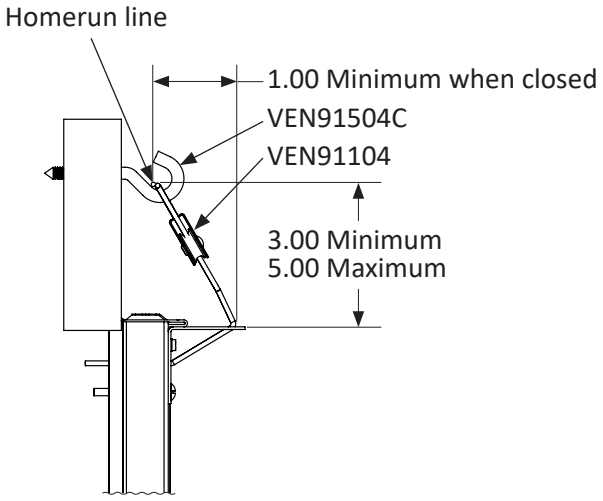

Detail D
(side view)

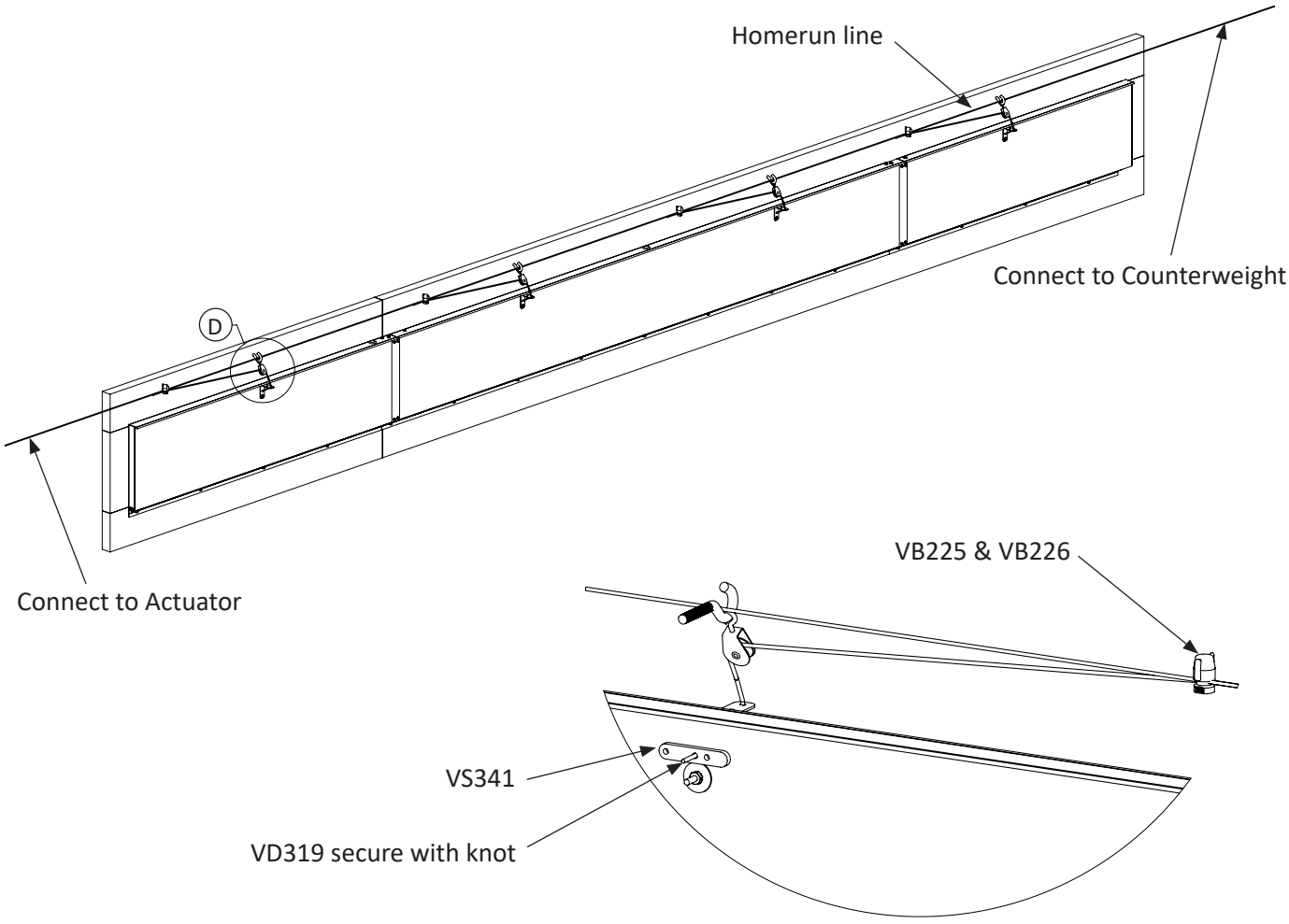

©2026 Valco Industries, Inc.

11. Continue pattern until last door, use other half of end inlet to cap the end. May need to cut inlet to length.

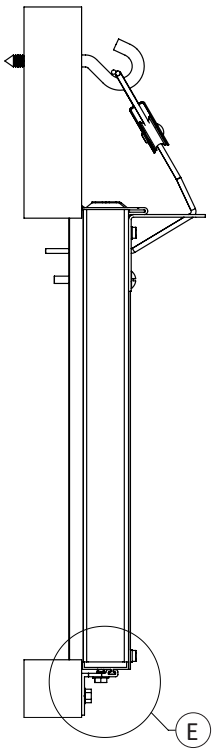

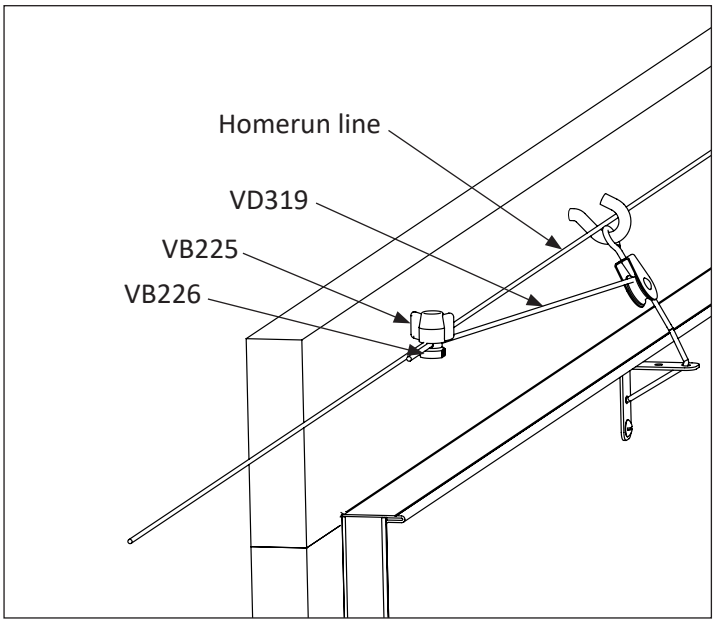

12. Slide inlets into final position as required. Secure hinge to inlet using VAHXHDSCR10X1ZP screw. Position screw between flexible hinge and inlet “T” mount.

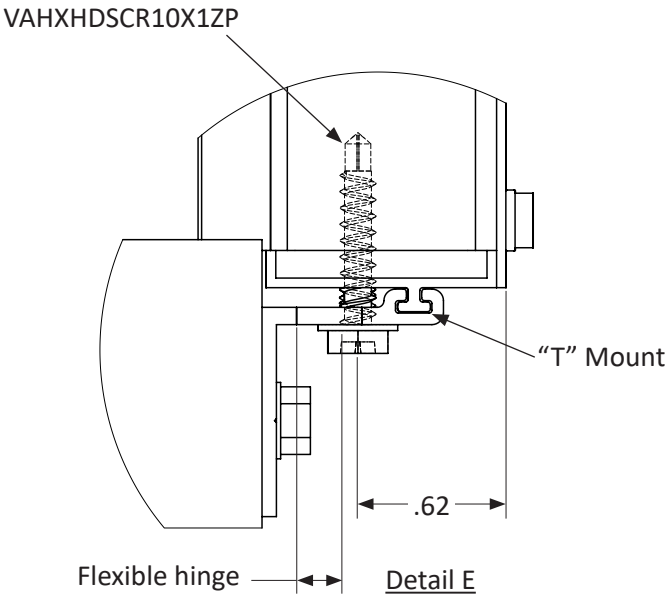

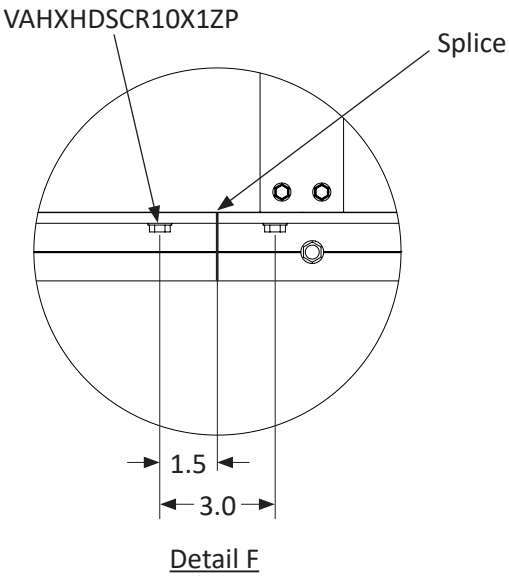

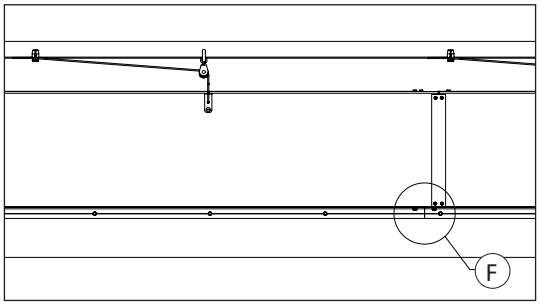

©2026 Valco Industries, Inc.

Exploded View of Inlet & Common Parts List

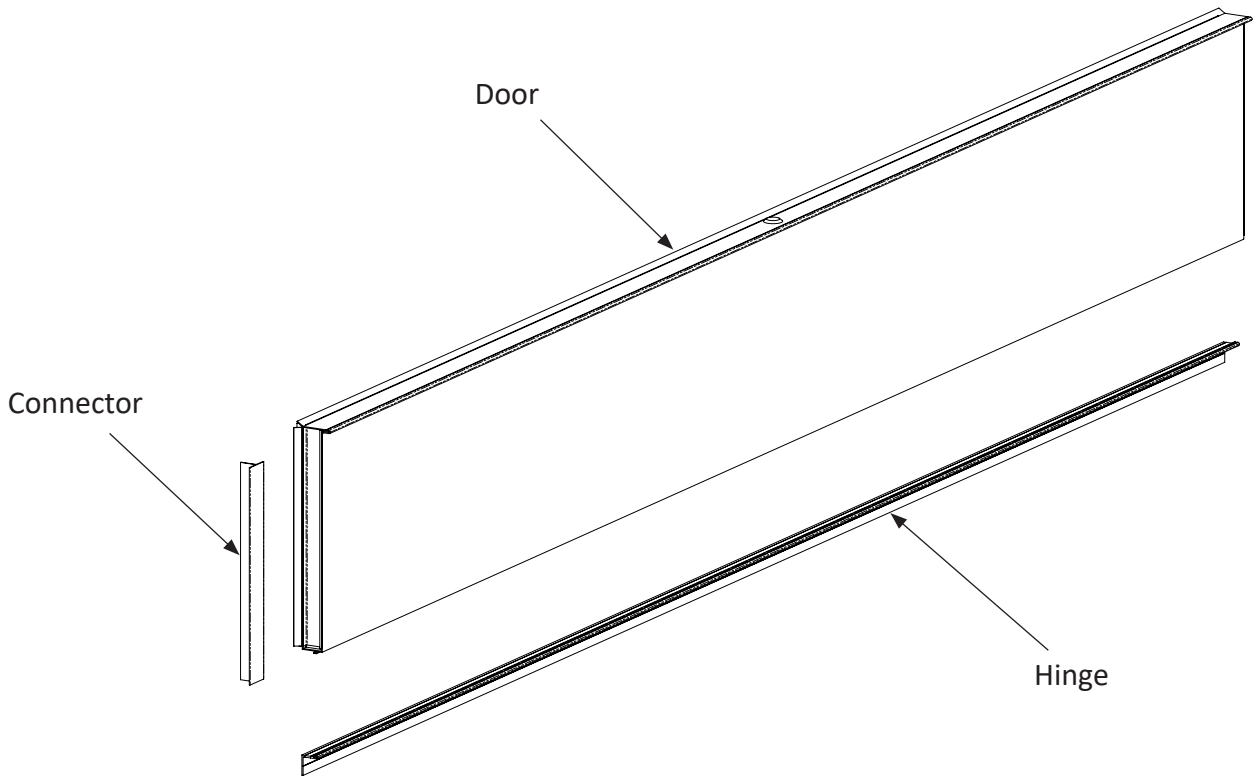

FRAMELESS INLETS				
PART #	**INLET TYPE**	**DOOR**	**HINGE**	**CONNECTOR**
810171	Discrete	VAI12DOOR48	810172	-
810183	Discrete	810182	810186	-
810185	Discrete	810184	810186	-
810178	Continuous	810052	EVH21X	810189
810180	Continuous	810179	EVH21X	810189
VAI12SWCI96K	Continuous	810050	EVH21X	-
VAI12SWSI96K	Continuous	810051	EVH21X	-

©2026 Valco Industries, Inc.

Hardware - replacement/repair part numbers

Hardware depicted are not actual size or to scale.

Hardware used with all Inlets:

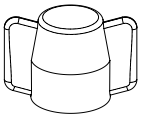

1/2” Large Clamp Nut VB225

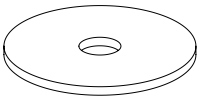

#10 ID X 1” OD Flat Washer MH8021

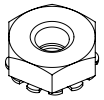

#10-24 Hex Kep Locknut 012408

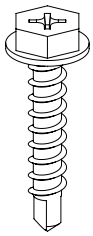

#10 X 1” Hex Washer Head Self-Drilling TEK Screw VAHXHDSCR10X1ZP

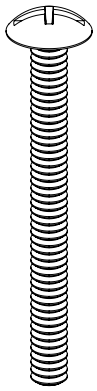

10-24 X 2” Truss Head Screw 690047

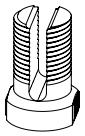

1/2” Large Clamp Bolt VB226

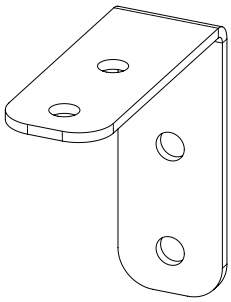

Galvanized Bracket Cord Guide 810040

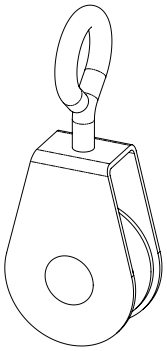

7/8” Nylon Swivel Pulley VEN91104

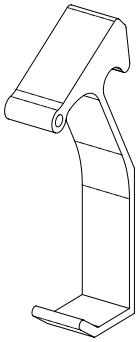

Black Plastic Vent Latch VAIPLATCH
(only for discrete inlets)

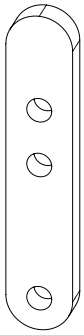

1/8” Cord Adjustment Strap VS341

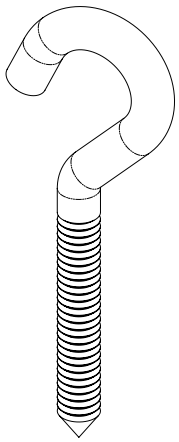

5/16” X 3-1/2” Screw Hook VEN91504C

1/8” Polyester Cord Natural Solid Braid VD319

Hardware used only with Continuous Inlets:

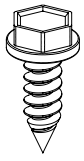

#7 X 1/2” SS Flange Screw 690359

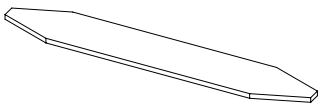

6” Aluminum Connector Strip for Continuous Inlet 810168

North America:
Phone: 800.99VALCO (800.998.2526)
Fax: 419.678.2200
Email: sales@val-co.com

International:
Phone: (+1) 419.678.8731
Fax: 419.678.2200
Email: intl.sales@val-co.com