Broiler Breeder Pullet Feeding

Quick Sheet Instructions

Table of Contents

Introduction 1
Feeding Recommendations 1
System Layout 2
Cutting the Restrictor 3
Feed Line Indexing/Programming 4
Boot Safety Switch 5
Feed Pan, Anti-Swing Clamps 5
LED Feeder Light Assembly 6
High Speed Gearbox 6

Introduction

Raising broiler breeder pullets requires specialized equipment, installation, and management that varies from standard broiler equipment. Feed distribution is essential to raising a uniform and healthy pullet flock. This quick sheet reviews the feeding equipment and provides essential information to help with the success of a broiler breeder pullet farmer. Special attention must be given during equipment selection, installation, and management to ensure equal feed delivery to all areas of the barn. Please refer to Table 1 for feed space recommendations.

Feeding Recommendations

Table 1

BROILER BREEDER FEEDING RECOMMENDATIONS				
Type	**Age**	**Chain**		**Pan ***
	weeks	**in/bird**	**cm/bird**	**birds/pan**
Female	0-4	2	5	20-27
Female	5-8	3.5	9	17-19
Female	9-12	5	13	15-17
Female	13-21	6	15	11-13
Male	0-4	2.5	6	20-25
Male	5-8	4	10	15-17
Male	9-12	5.5	14	13-15
Male	13-21	7	18	8-11

* Pan is based on 13 or 14 in diameter.

Updated (3/20/2026)

NOTE:

Feed pan guidelines are based on industry standards for adequate feed space per bird at different ages. Under restricted feeding, it may sometimes be necessary to operate outside of the recommended birds per pan in order to maintain even feed distribution across the system.

©2026 Valco Industries, Inc.

System Layout

Please refer to Figures 1-3 for examples of a typical system layout.

Figure 1

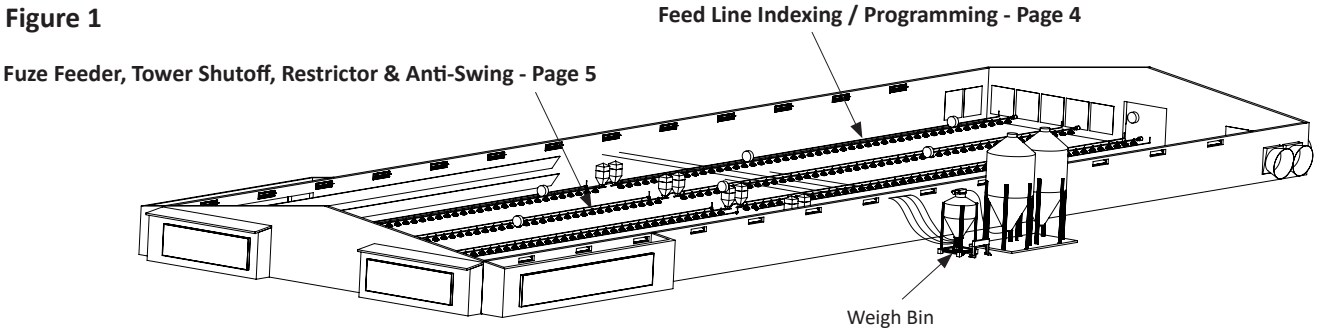

Figure 2

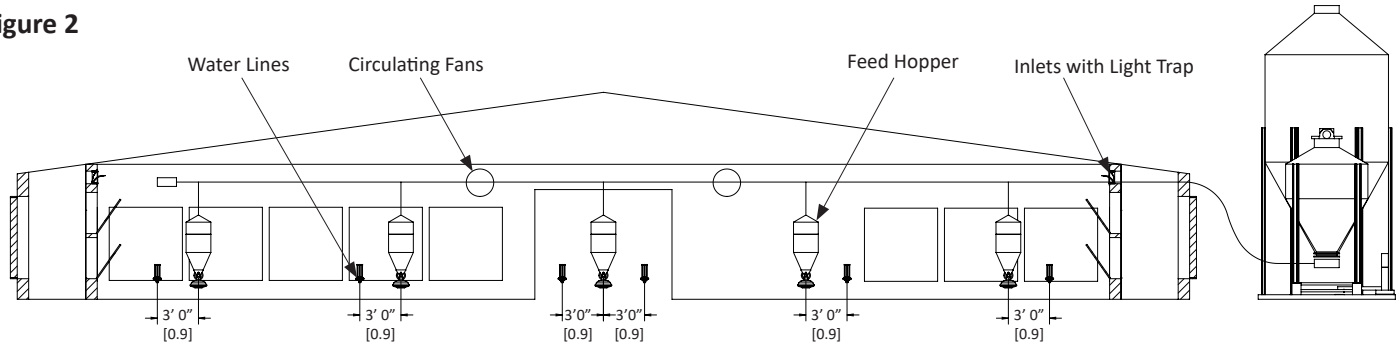

Figure 3

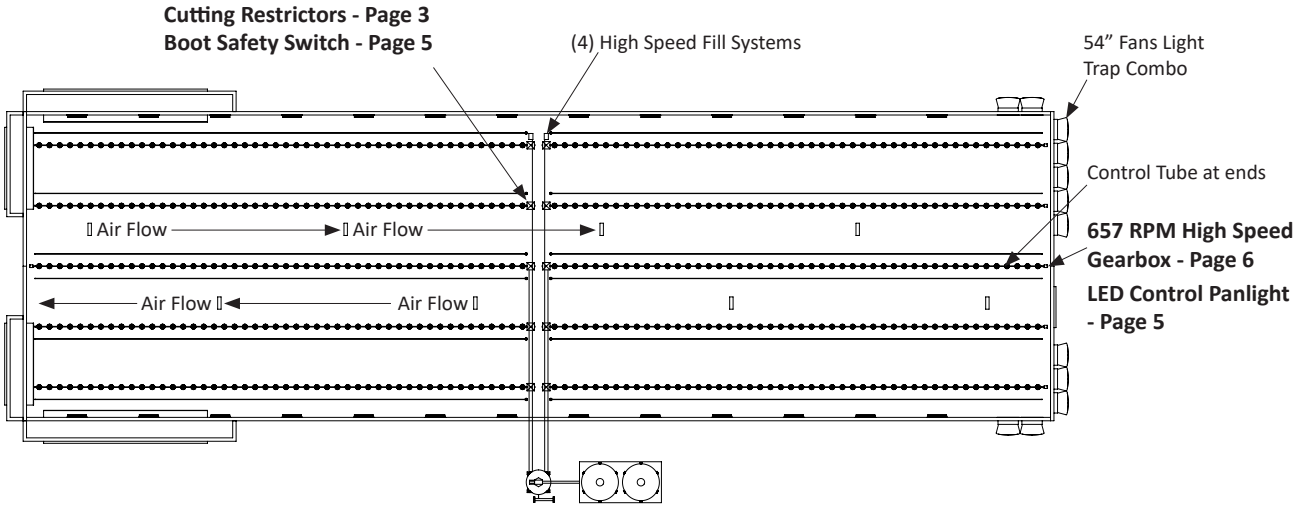

©2026 Valco Industries, Inc.

Cutting the Restrictor

To have enough feed delivery rate for pullets, it is extremely important to cut the flighting anchor restrictor shaft. Cutting the shaft along with a high-speed gearbox will provide about a 32 lb. per minute delivery rate per auger, assuming a 40 lb. per cubic foot density feed. It is also critical the delivery systems from the bin can keep all the hoppers full as the floor feeding systems are running. Follow the instructions below to shorten the restrictor shaft.

Installation Instructions

1. Using a hacksaw or grinder, cut 6” (152mm) off the end of the flighting anchor, as shown in Figure 4.

Figure 4

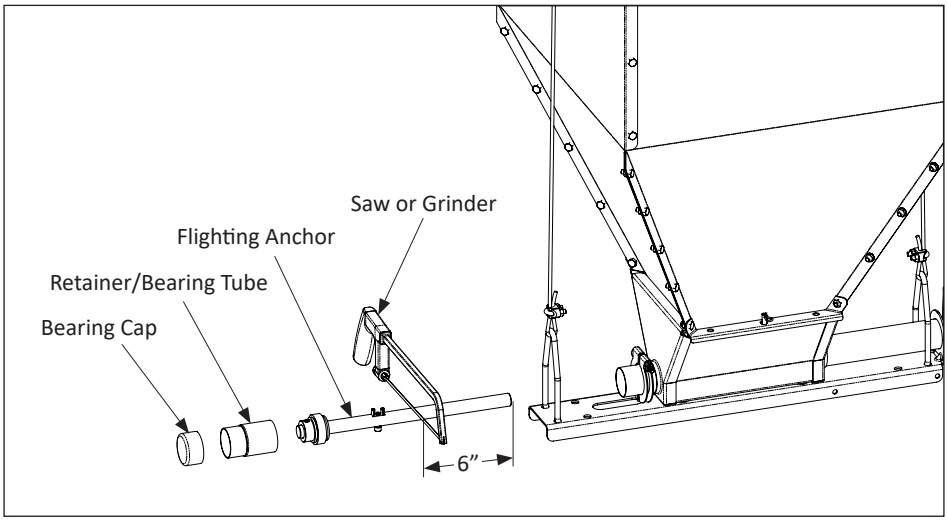

2. Assemble bearing cap, retainer, auger, and flighting anchor assembly, as shown in Figure 5. Slide components into hopper and tighten tube clamp.

Figure 5

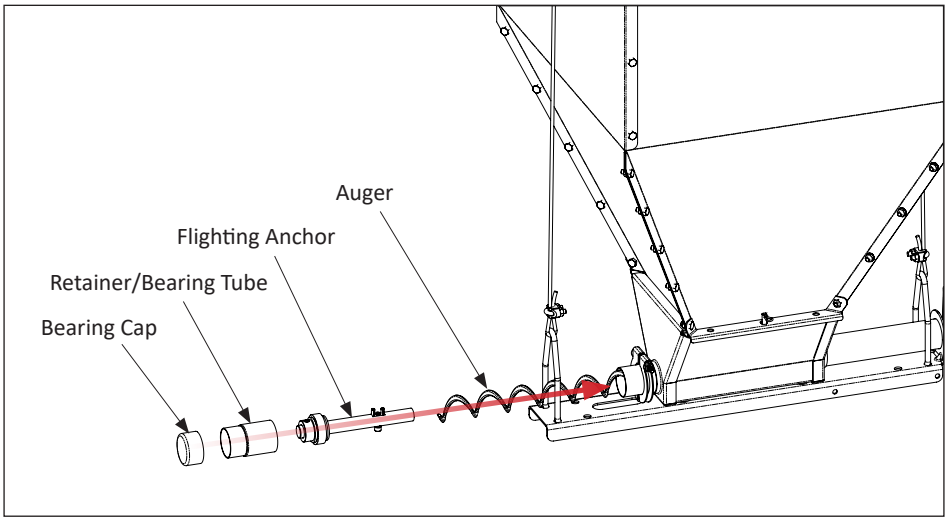

Handle AUGER with caution.
Wear safety glasses to protect your eyes and gloves to protect your hands from injury.

©2026 Valco Industries, Inc.

Indexing the Line (Programming)

One of the goals of raising a pullet flock is to raise a uniform, healthy flock with specific weight gain goals. It is critical the feed is distributed evenly to every feed pan throughout the barn as quickly as possible. Indexing the lines (or programming) is one of the keys to ensuring speedy and even feed distribution. To correctly index, tubes near the hopper are installed rotated so very little feed falls out of the tube holes into the pan, with most feed bypassing and continuing towards the end of the feed line, as shown in Figure 6. The tubes closer to the end of the line are rotated so more feed falls into the pan. The last tube in line (next to the drive) should be a control tube. The index charts in ***Tube Indexing Gauge Manual (990044)*** communicate the proper rotation for varying length feed lines.

Figure 6

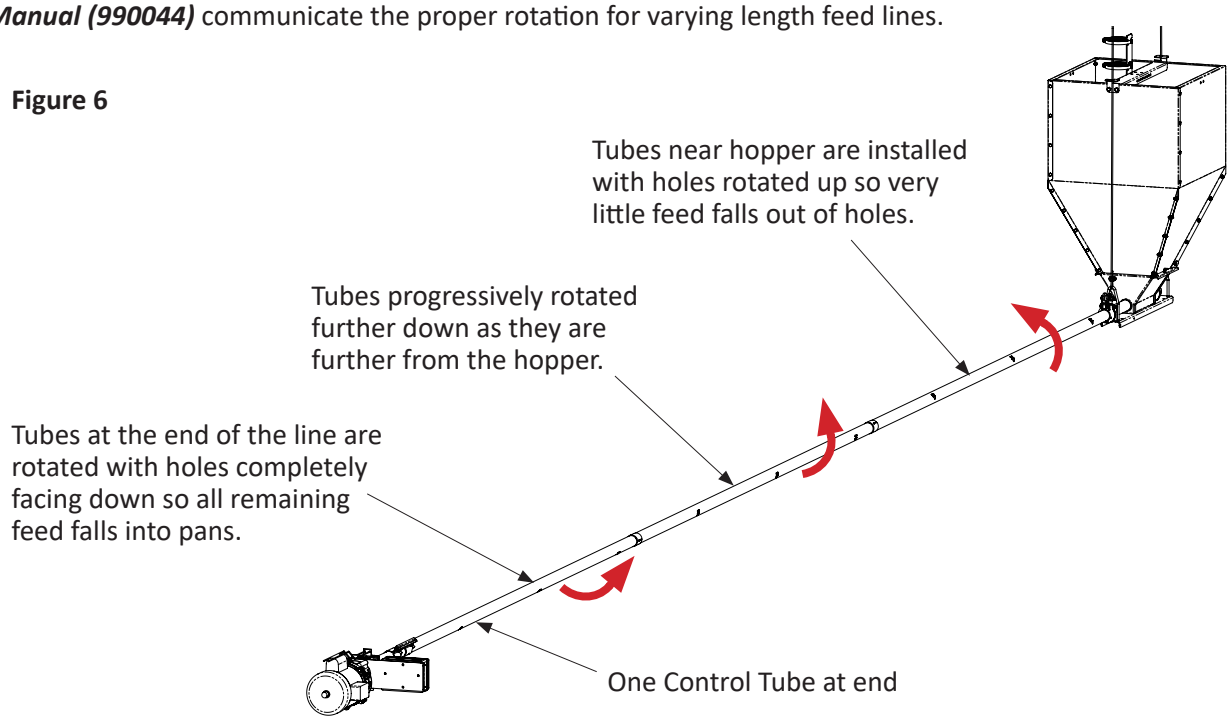

Figure 7

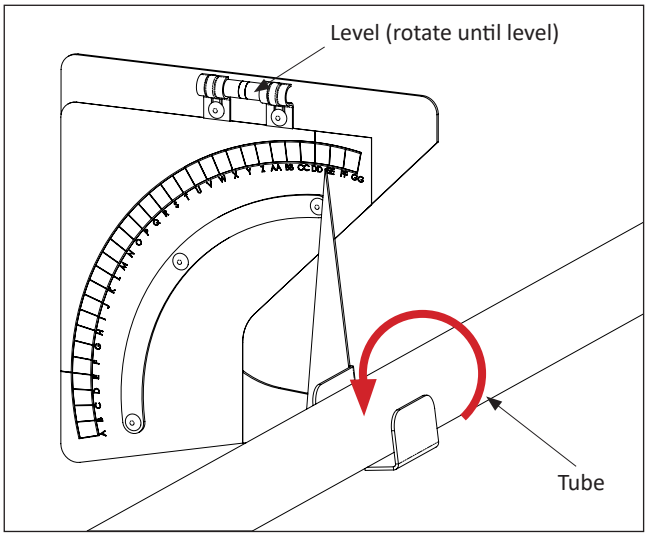

1. Loosen the tube clamps, or if the line is new, leave the tube clamps loose until the line has been programmed. BE SURE TO TURN OFF ALL POWER BEFORE SERVICING!

2. Start at the hopper end of the feed line, facing the hopper, attach the Indexing Gauge on the feeder tube by securely snapping it over both the tabs of the feed drop hole of the tube, as shown in Figure 7. If this is a new installation, you will need to bend the tabs out with a pliers if you have not done so already.

3. Set the Gauge Indicator to the proper setting on the Gauge according to the markings on the tube, and rotate until the Gauge is level, as shown in Figure 7.

4. Tighten the clamp on the bell of the Feed Tube toward the hopper once you have rotated the tube to the appropriate setting according to the chart for your system and the Gauge is LEVEL, as shown in Figure 7. This will prevent the tube which you have already set from moving. Continue this procedure for the remainder of the line as you set each tube according to the appropriate chart for your system.

5. Align feed pans, tighten the non-swing clamps on each feeder as you program the feed line.

NOTE: For additional information, please refer to the ***Tube Indexing Gauge Manual (990044)***.

©2026 Valco Industries, Inc.

Boot Safety Switch

The boot safety switch (455800) needs to be installed in every floor hopper. This sensor detects when the hopper has emptied of feed, either because the weigh bin is empty and the feeding session is over, or because the fill system has not kept up with the floor augers due to bridging or other problems. When the sensor detects the hopper is empty, the motor relay switches state and turns off the floor feeding auger motor pulling feed from that hopper. It is critical the boot safety sensors are operational so the feed lines never run empty and always stay charged, ready for the next day's feeding session.

Mount enclosure to side of boot rail with 1/4" hardware. Use the factory mounting holes in rail. Do not install enclosure on anchor bearing side to leave clearance for auger installation purposes. Refer to Figure 8.

Figure 8

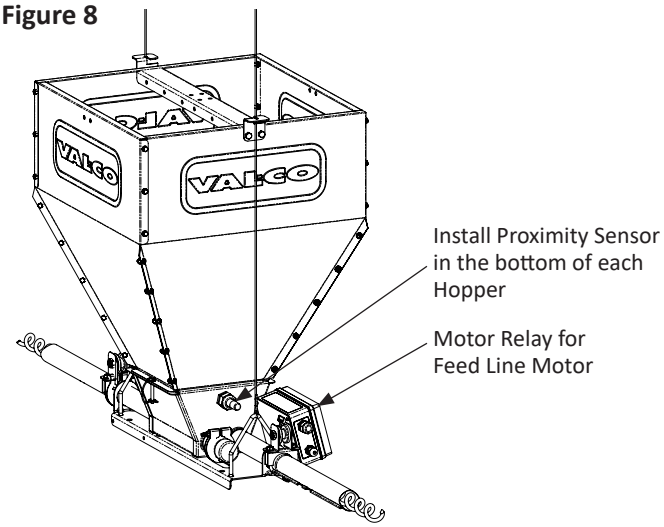

NOTE: For additional information, please refer to the ***Boot Safety Proximity Switch Quick Sheet (990140)***.

Feed Pan, Anti-Swing Clamps

The Fuze 5 spoke pan is a good option for pullet feeding because the large grill openings allow bird movement in and out of the pan. The collar setting should be positioned on number 1 for the entire flock, the smallest feed amount.

The feed restrictor (450594) reduces the amount of feed that each feed pan holds. This helps the feed delivery system fill pans faster and is an important part of a proper functioning pullet feeding system. Place the feed restrictor inside each Fuze Pan as they are being assembled, as shown in Figure 9. (*Do not place restrictor inside control pans.*)

The anti-swing kit helps keep the feeders vertical as the birds are feeding, which can help reduce feed waste.

Figure 9

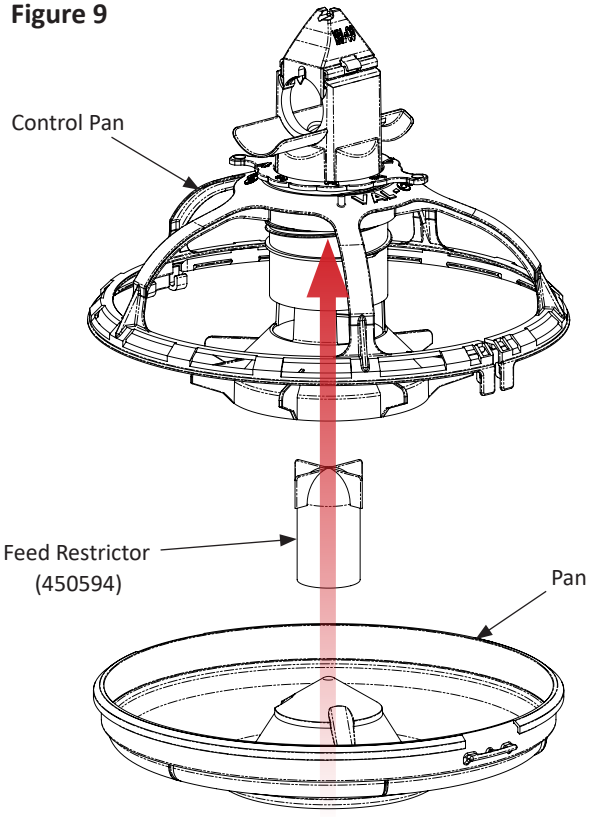

Figure 10

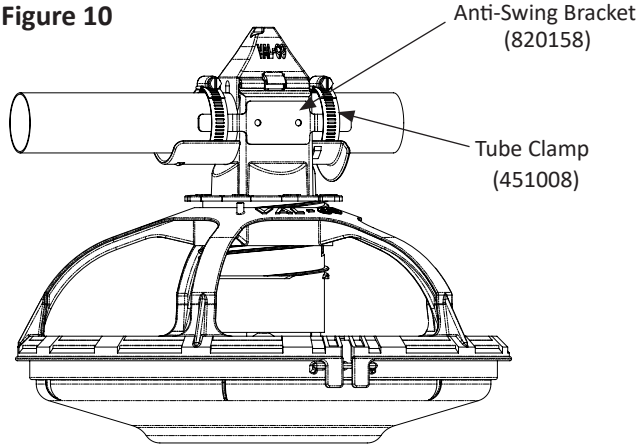

With the feeder tower hanging vertically, fasten the anti-swing bracket (820158) onto the port tube using (2) tube clamps (451008) as shown in Figure 10.

NOTE: Tighten the tube clamps (451008) over the non-swing bracket tabs (820158), as close to the control pan as possible.

NOTE: For additional information, refer to the ***FUZE® ProLine Feeders Control Pans and Feed Line System Manual (990002)***.

©2026 Valco Industries, Inc.

LED Feeder Light Assembly

A properly functioning control pan that attracts birds is important to ensure the feeders start and keep running during the feed session. Using an LED light above the control pan is part of the solution to attracting birds to the end of the feed line. The light can be turned on just before the start of the feed session and should be turned off after the feed session.

Loosen the hose clamps to adjust the assembly as required for best possible positioning. Secure clamps after positioning. *Assembly may be positioned on either side of or on the bottom of the feed tube.* Refer to Figure 11.

Figure 11

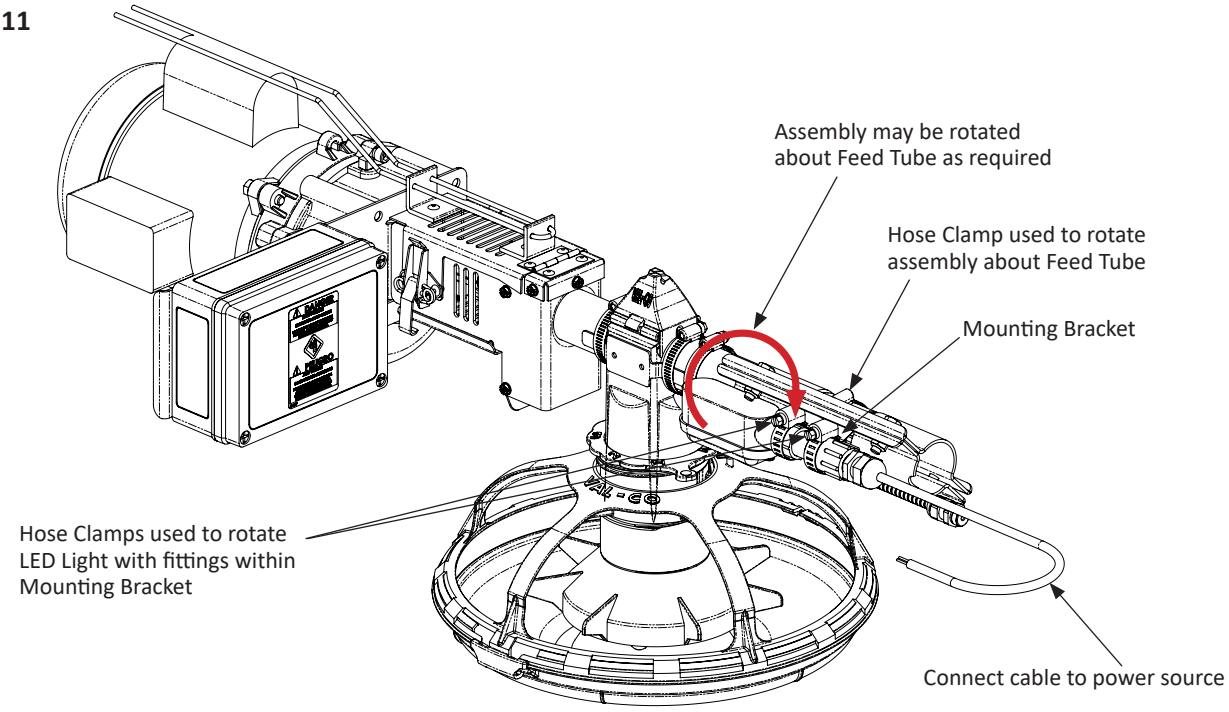

NOTE: For additional information, please refer to the ***LED Feeder Light Assembly Quick Sheet (990048)***.

High Speed Gearbox

The feed lines should have high speed 657 rpm gearboxes installed and sufficiently sized motors to handle the torque requirement. Special attention should be given to the auger attachment. Shims should be installed in between the auger and shaft if there is any play/gap, as shown in Figure 12.

Figure 12

