Attic Inlet

812270, 812305

Repair Parts List

Inlets above Z-Pro® fans

Positive Pressure Inlet
(812270)

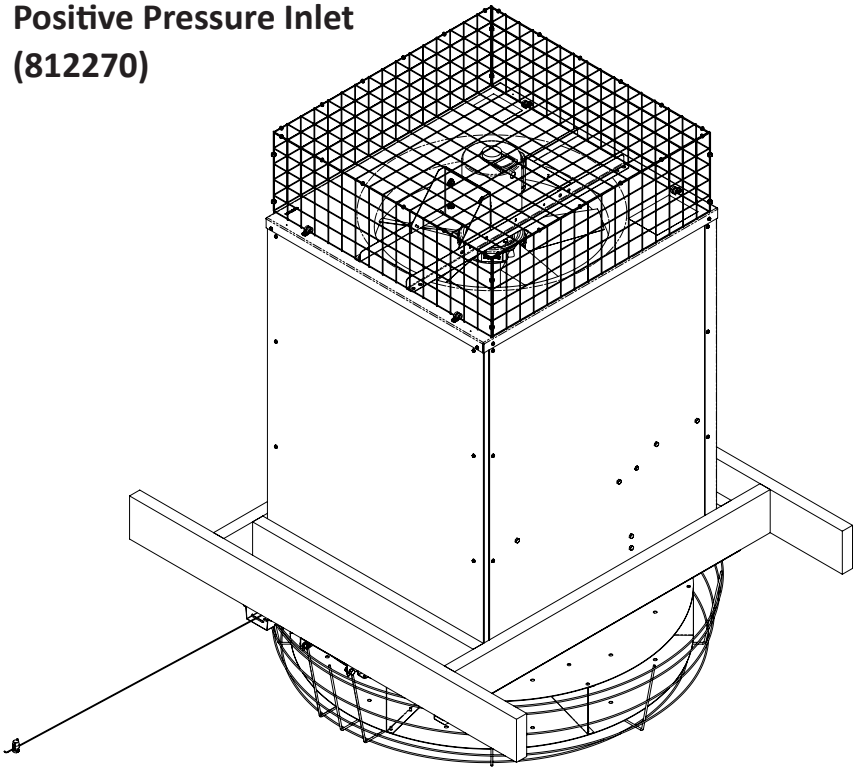

Standard Inlet
(812305)

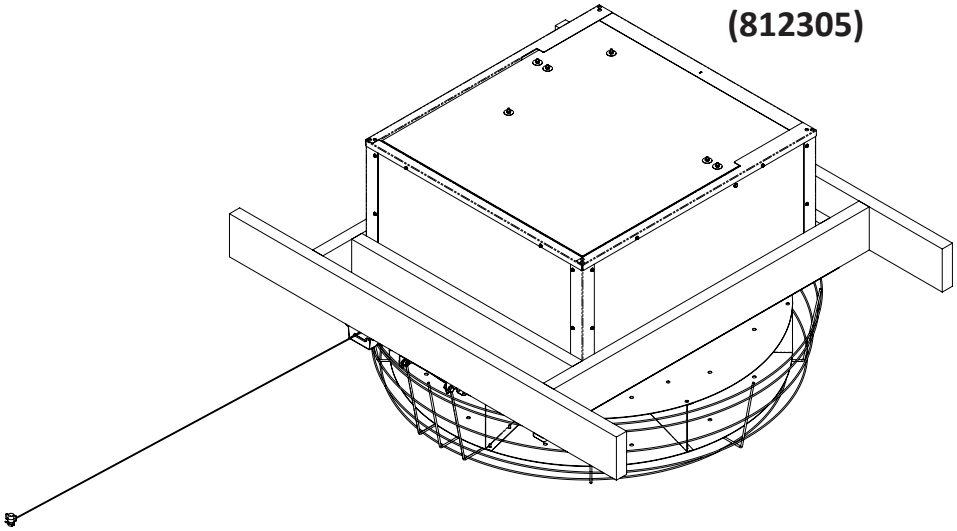

©2026 Valco Industries, Inc.

Standard Attic Inlet (812305): Exploded Parts Drawing

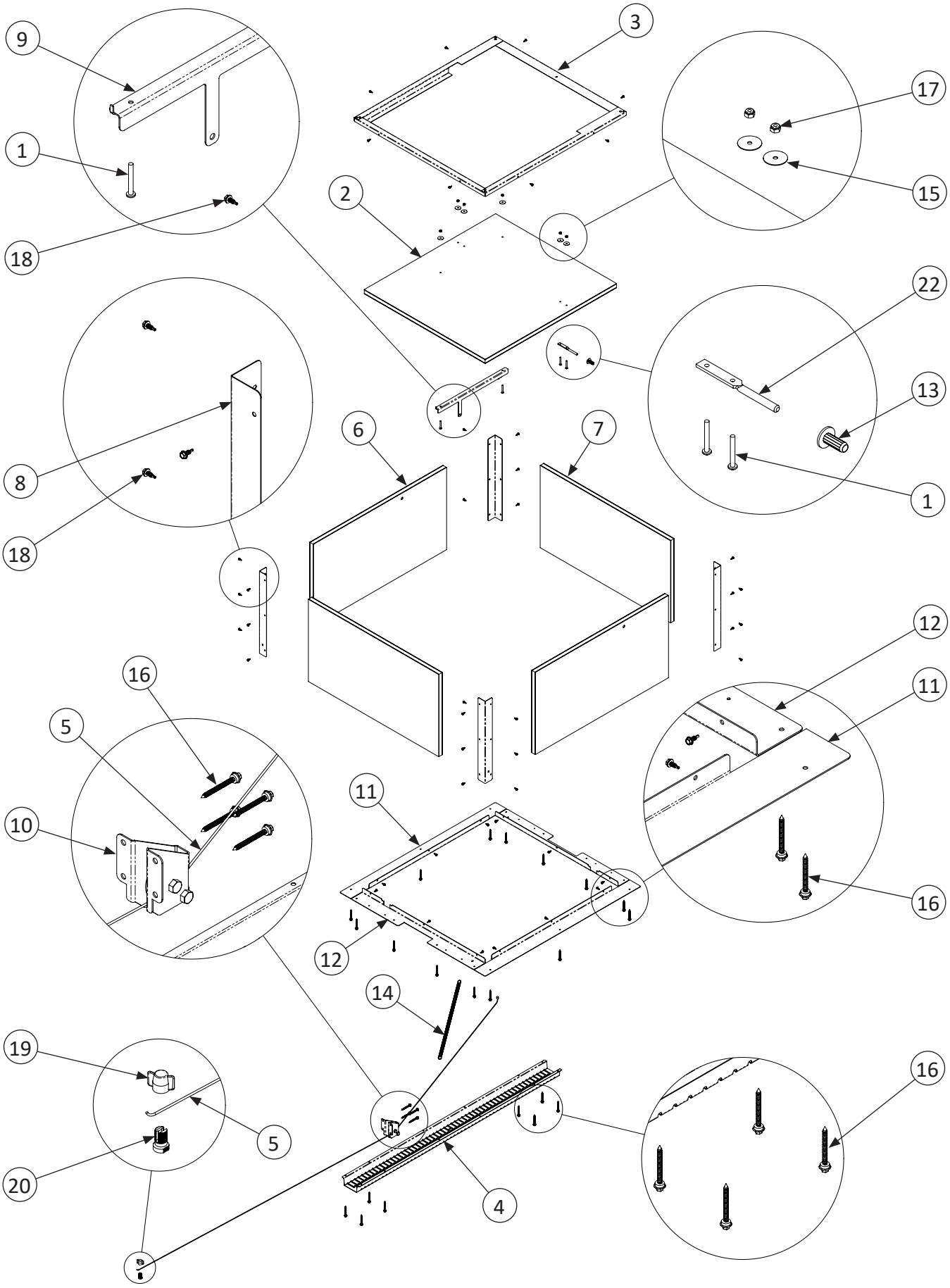

©2026 Valco Industries, Inc.

Standard Attic Inlet (812305): Parts List

ITEM #	PART #	QTY	DESCRIPTION
1	690321	6	#10-24 X 1-1/2” SCREW
2	812088	1	DAMPER PANEL, LP INLET
3	812093-ZM	1	30” DAMPER STOP/CAP ASSEMBLY
4	812095-ZM	1	GUARD, HOMERUN CABLE
5	812103	1	SS 3/32” CABLE, 7 X 19
6	812107	2	PANEL, 32.5” X 17.375” X .91”
7	812108	2	PANEL, 31.81” X 17.375” X .91”
8	812109-ZM	4	CORNER BRACKET, 17.34” LONG
9	812117-ZM	1	CABLE & SPRING CHANNEL
10	812120	1	PULLEY ASSEMBLY, 1-7/8” DIAMETER
11	812291-ZM	2	30” ANGLE MOUNT
12	812296-ZM	2	30” NOTCHED ANGLE MOUNT
13	812297	2	HINGE, BUSHING
14	FP831-SS	1	SPRING, DAMPER VANE, SS
15	MH8028	6	#10 X 1” FLAT WASHER
16	MH8206	26	#10 X 2” SCREW WITH SEAL
17	MH90030	6	#10-24 NYLOCK HEX NUT
18	MH90251	44	#8-18 X 1/2” TEK SCREW
19	VB225	1	1/2” LARGE CLAMP NUT
20	VB227	1	1/2” LARGE CLAMP BOLT
21	VC358	1	1/8” CABLE CLAMP
22	ZR1724	2	DAMPER HINGE

Standard Inlet Hardware - Replacement/Repair Part Numbers

Hardware depicted are not actual size or to scale.



#10 X 1”
Flat Washer
MH8028



#10-24
Nylock Hex Nut
MH90030

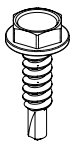

#8-18 X 1/2”
Tek Screw
MH90251

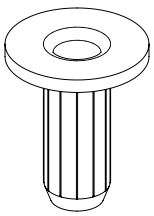

Hinge Bushing
812297

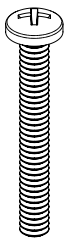

#10-24 X 1-1/2”
Pan Head Screw
690321

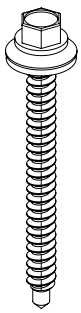

#10 X 2”
Sheet Metal Screw
MH8206

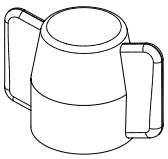

1/2”
Large Clamp Nut
VB225

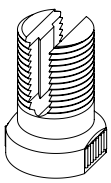

1/2”
Large Clamp Bolt
VB227

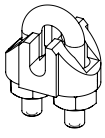

1/8”
Cable Clamp
VC358

Hardware shown above can be found in Parts Bag 812102

©2026 Valco Industries, Inc.

Positive Pressure Attic Inlet with Fan (812270): Exploded Parts Drawing

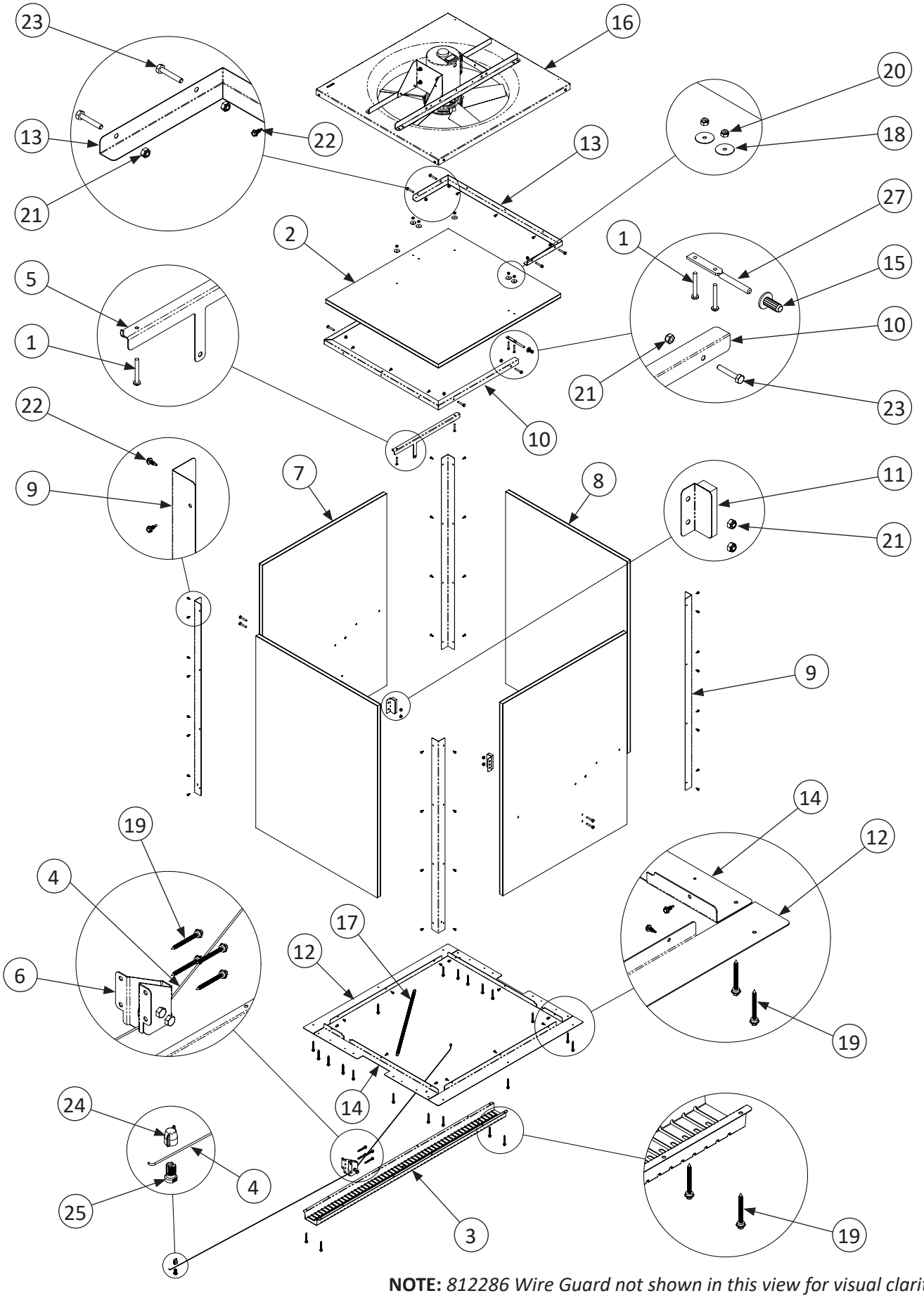

NOTE: *812286 Wire Guard not shown in this view for visual clarity.*

©2026 Valco Industries, Inc.

Positive Pressure Attic Inlet with Fan (812270): Parts List

ITEM #	PART #	QTY	DESCRIPTION
1	690321	6	#10-24 X 1-1/2” SCREW
2	812088	1	DAMPER PANEL, LP INLET
3	812095-ZM	1	GUARD, HOMERUN CABLE
4	812103	1	SS 3/32” CABLE, 7 X 19
5	812117-ZM	1	CABLE & SPRING CHANNEL
6	812120	1	PULLEY ASSEMBLY, 1-7/8” DIAMETER
7	812271	2	PANEL, 32.5” X 43.5” X .91”
8	812272	2	PANEL, 31.81” X 43.5” X .91”
9	812273-ZM	4	CORNER BRACKET, PP Z-PRO INLET
10	812281-ZM	1	ANGLE, LOWER DAMPER STOP, PP
11	812284	2	ANGLE, DAMPER STOP ASSEMBLY
12	812291-ZM	2	30” ANGLE MOUNT
13	812294-ZM	1	ANGLE, UPPER DAMPER STOP, PP
14	812296-ZM	2	30” NOTCHED ANGLE MOUNT
15	812297	2	HINGE, BUSHING
16	924020-ZM-SC	1	24” FAN, ZM, PANEL, CP BLD/SS, DD 0.5HP, 230V, 1PH, 60HZ
17	FP831-SS	1	SPRING, DAMPER VANE, SS
18	MH8028	6	#10 X 1” FLAT WASHER
19	MH8206	26	#10 X 2” SCREW WITH SEAL
20	MH90030	6	#10-24 NYLOCK HEX NUT
21	MH90043	12	1/4-20 NYLOCK HEX NUT
22	MH90251	58	#8-18 X 1/2” TEK SCREW
23	MH90918	12	1/4-20 X 1-1/2” HEX BOLT
24	VB225	1	1/2” LARGE CLAMP NUT
25	VB227	1	1/2” LARGE CLAMP BOLT
26	VC358	1	1/8” CABLE CLAMP
27	ZR1724	2	DAMPER HINGE

Positive Pressure Inlet Hardware - Replacement/Repair Part Numbers

Hardware depicted are not actual size or to scale.



#10 X 1”
Flat Washer
MH8028



#10-24
Nylock Hex Nut
MH90030

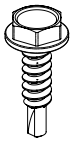

#8-18 X 1/2”
Tek Screw
MH90251

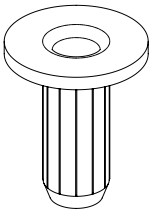

Hinge Bushing
812297

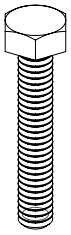

1/4-20 X 1-1/2”
Hex Bolt
MH90918

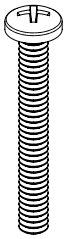

#10-24 X 1-1/2”
Pan Head Screw
690321

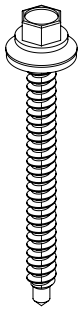

#10 X 2”
Sheet Metal Screw
MH8206

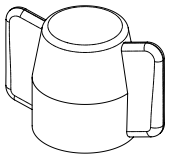

1/2”
Large Clamp Nut
VB225

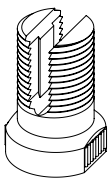

1/2”
Large Clamp Bolt
VB227

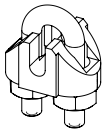

1/8”
Cable Clamp
VC358



1/4-20
Nylock hex Nut
MH90043

Hardware shown above can be found in Parts Bag 812292

©2026 Valco Industries, Inc.

24” Panel Fan (924020-ZM-SC) and Wire Guard (812286): Exploded Drawing and Parts List

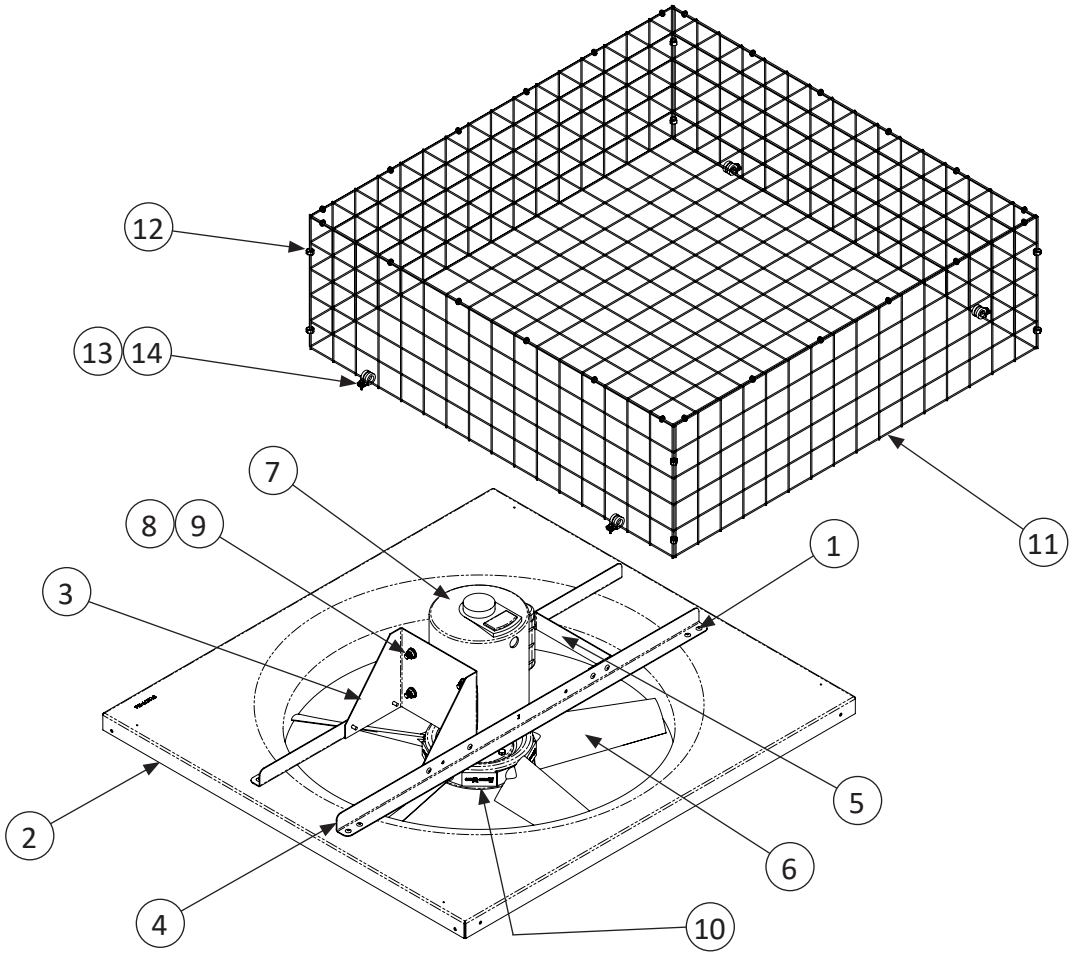

ITEM #	PART #	QTY	DESCRIPTION
24” PANEL FAN (924020-ZM-SC)			
1	690384	16	3/16” X .126-.250 SS POP RIVET
2	812279-ZM	1	ORIFICE, 24” Z FAN PANEL
3	924002-ZM	1	MOTOR MOUNT, 24” PANEL FAN
4	924003-ZM	2	CROSS BRACE, 24” PANEL FAN
5	924008-ZM	1	BRACE, 24” PANEL FAN
6	B339	1	24” 5-BLADE 45 DEG. W/1” BORE
7	M721	1	MOTOR, .5HP, 230V, 60HZ, 1PH
8	MH8056	4	5/16-18 FLANGE NUT
9	MH8091	4	5/16-18 X 3/4” FLANGE BOLT
10	ZFB301	1	TRANTORQUE, 5/8” ID X 1” OD
11	812286	1	24” PANEL FAN WIRE GUARD ASSEMBLY
WIRE GUARD ASSEMBLY HARDWARE *(From Parts Bag 812292)*			
12	980105	8	HOSE CLAMP
13	MH90251	4	#8-18 X 1/2” TEK SCREW
14	PMSC1-2CLMPONLY	4	1/2” PIPE CLAMP

Some hardware shown in Wire Guard Assembly can be found in Parts Bag 812292

©2026 Valco Industries, Inc.