Mach 57
Fiberglass Damper Fan

Repair Parts List

57” Assembled /-KD Fans
Galvanized and Cast Aluminum Blade Models

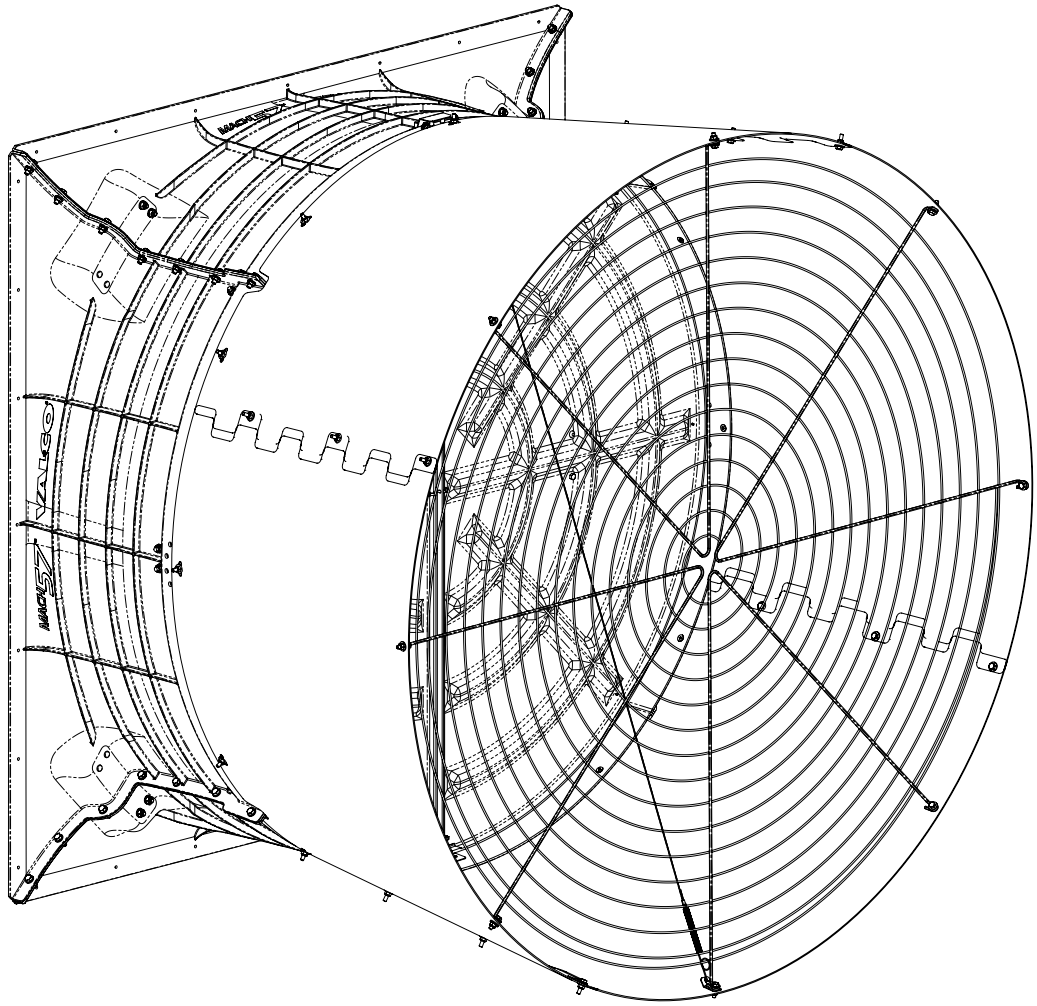

©2026 Valco Industries, Inc.

57” Belt Drive Damper Fans - Exploded View

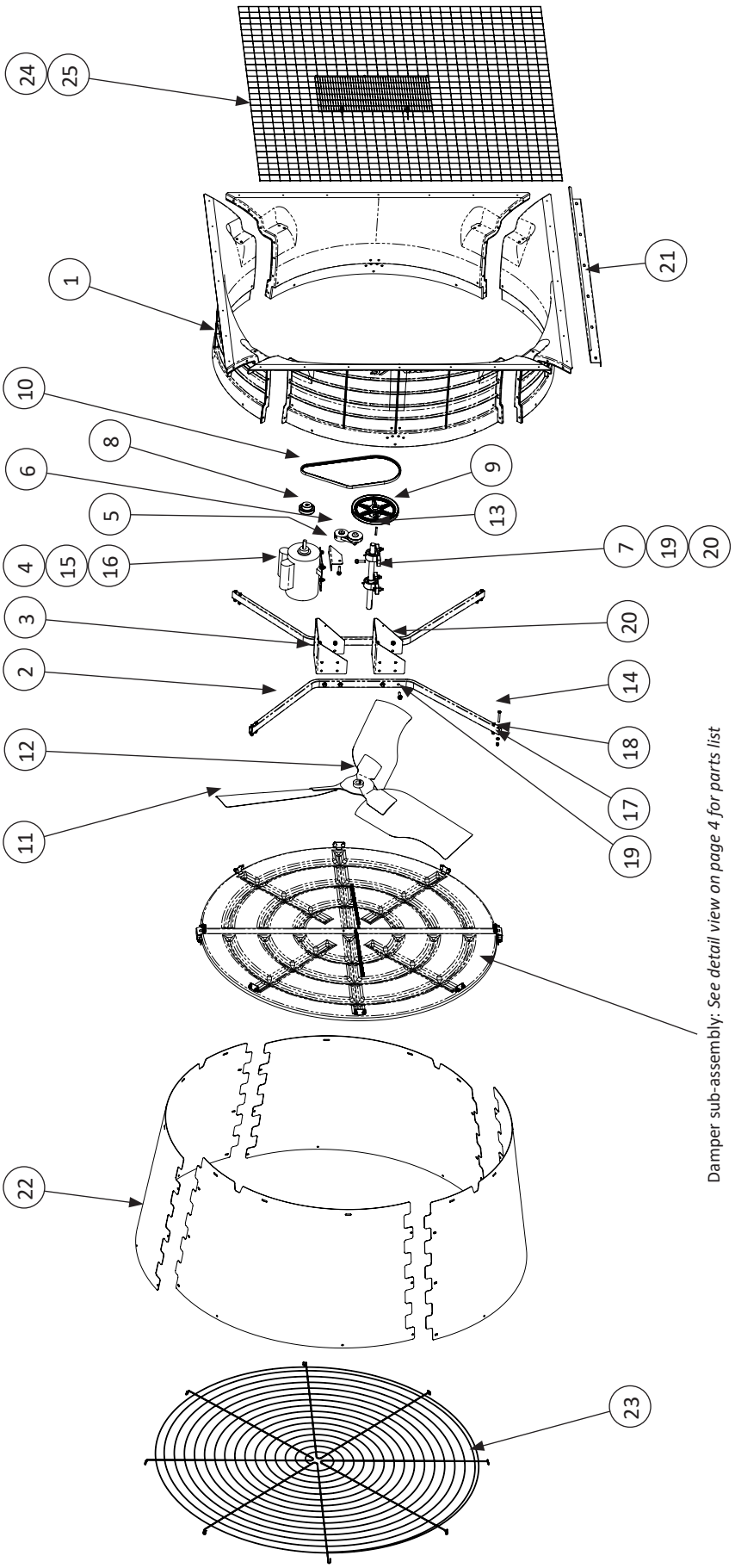

©2026 Valco Industries, Inc.

©2026 Valco Industries, Inc.

57” Belt Drive Damper Fans - Parts List

Use exploded view drawing on previous page for part identification.

FAN SIZE AND MATERIAL			57” GALV / ZP	57” SS
KEY	DESCRIPTION	QTY	PART #	PART #
1	FIBERGLASS HOUSING	4	957010	957010
2	MOTOR MOUNT RAILS	2	948007	FP448
3	MOTOR MOUNT BRACKET	2	936008	FP449
4	MOTOR	1	SEE CHART	SEE CHART
5	AUTO TENSIONER BRACKET	1	980068	980068
6	AUTO TENSIONER	1	980066	980066
7	FAN SHAFT & BEARING ASSY	1	980113	980113
8	DRIVE PULLEY	1	SEE CHART	SEE CHART
9	DRIVEN PULLEY	1	SEE CHART	SEE CHART
10	BELT	1	SEE CHART	SEE CHART
11	BLADE	1	SEE CHART	SEE CHART
12	BLADE KEY	1	SEE CHART	SEE CHART
13	1/4” X 1/4” X 1-3/4” KEY	1	936032	936032
14	5/16-18 X 2-1/4” BOLT	8	690257	MH8097
15	5/16-18 X 3/4” BOLT	4	690389	MH8091
16	5/16-18 FLANGE NUT	4	501441	MH8056
17	5/16-18 NYLOCK NUT	8	012789	MH90044
18	5/16-18 FLAT WASHER	8	010458	010659
19	3/8-16 X 1-1/4” BOLT	13	936026	MH8124
20	3/8-16 NYLOCK / FLANGE NUT	12	936054	MH8057
21	DRIP EDGE LEDGE, FAN SHELF	1	957032	957032
22	CONE PANEL, BLACK	4	957188	957188
23	FAN GRILL	1	954001	954001
24	GUARD SCREEN ASSEMBLY	1	954095	954095
25	LATCH SPRING	2	00050282	00050282

Hardware used to assemble housings and cones detailed on a separate page.

KEY	4	8	9	10	11	12
DESCRIPTION	MOTOR	DRIVE PULLEY	DRIVEN PULLEY	BELT	BLADE	*BLADE KEY
QTY	1	1	1	1	1	1
FAN PART #	PART #					
957520	980031	980007	980026	ZV747	957060	ZFB302
957525	980031	980007	980015	980030	957031	936032
957530	980031	ZV774	980015	980036	957031	936032
957555	980032	980025	980026	980012	957031	936032
957560	980031	980033	980015	980030	957060	ZFB302
957570	980197	980033	980026	ZV747	957031	936032
957580	980079	980035	980015	980036	957031	936032
957590	980197	980035	980026	ZV747	957031	936032
957595	980197	980007	980015	980030	957031	936032
957565 / -SSHW	980032	980033	980015	980030	957060	ZFB302

*(*or Trantorque)*

Damper - Exploded Drawing and Parts List

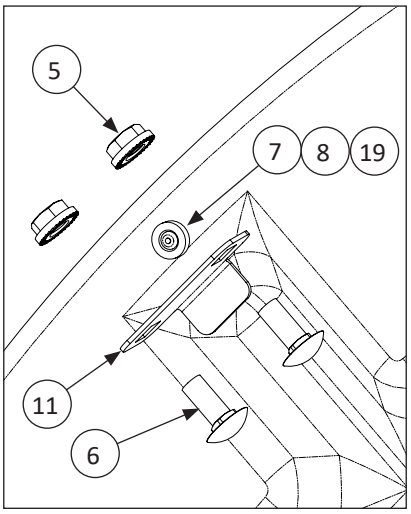

Enlarged Detail View: Magnets

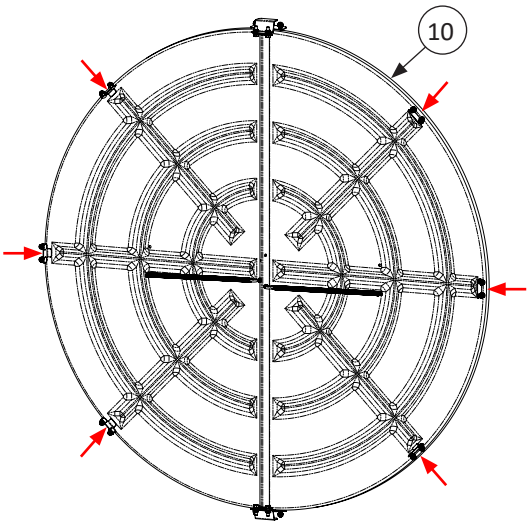

Magnet Locations

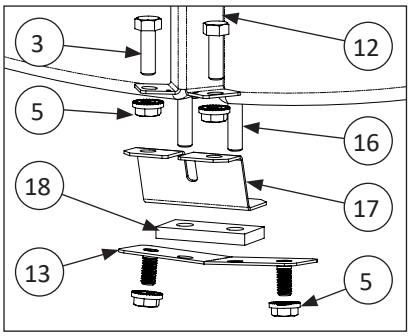

Enlarged Detail View: Damper Hardware

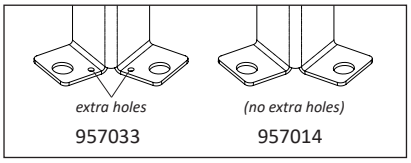

Comparison View: 957033 vs. 957014

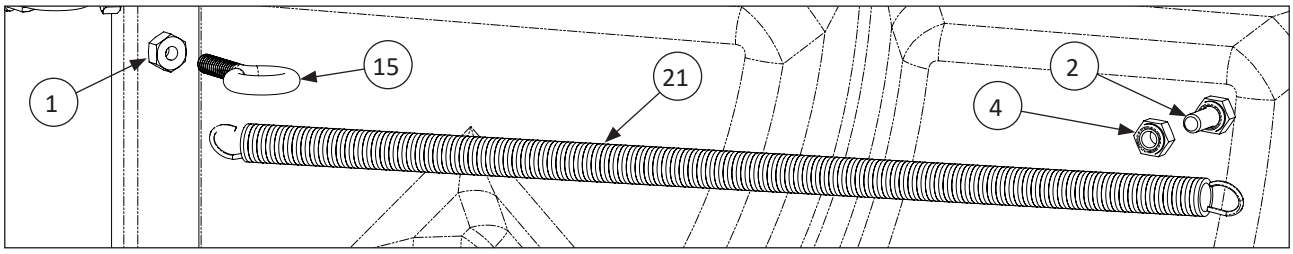

Enlarged Detail View: Damper Spring

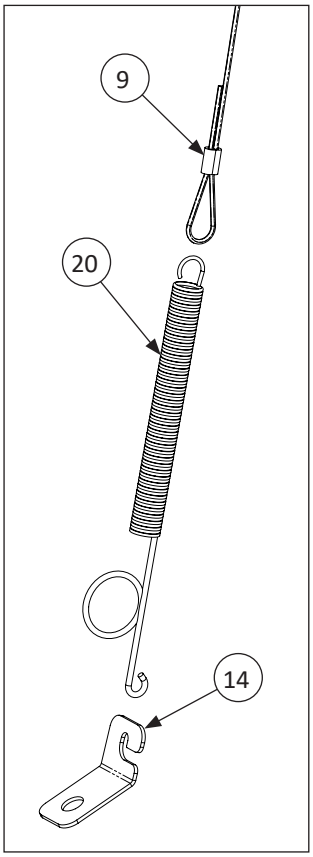

Enlarged Detail View: Damper Cable

ITEM #	ZP PART #	SS PART #	QTY	DESCRIPTION
DAMPER - REPLACEMENT PARTS				
1	010602	MH90017	4	1/4-20 HEX NUT
2	010619	690343	2	1/4-20 X 1” HEX BOLT
3	010645	010431	28	5/16-18 X 1” HEX BOLT
4	012793	MH90043	4	1/4-20 LOCK NUT
5	501441	MH8056	48	5/16-18 FLANGED HEX NUT
6	690027	690470	12	5/16-18 X 3/4” CARRIAGE BOLT
7	690489	690489	6	M3-0.5 X 12MM FLAT BOLT
8	690490	690490	6	M3-0.S NYLOCK NUT
9	957008	957007	1	DAMPER CABLE
10	957011	957011	2	DAMPER DOOR
11	957013	957022	6	MAGNET CATCH BRACKET
12	957014	957014	1	DAMPER STRUT, LONG, 57.85” (*no extra holes*)
	957033	957033		DAMPER STRUT, SHORT, 57.68” (*with extra holes*)
13	957016	957016	2	DAMPER PIVOT PLATE
14	957017	957017	2	CONE CABLE BRACKET
15	957021	957012	2	1/4-20 X 1” EYE BOLT
16	957024	957024	2	DAMPER HINGE ROD
17	957026	957026	2	DAMPER ROD STOP
18	957028	957028	1	DAMPER DOOR SPACER
19	980089	980089	6	MAGNET RING
20	00050282	00050282	1	LATCH SPRING
21	FP831-SS	FP831-SS	2	DAMPER VANE SPRING
22	PMTT6	PMTT6	6	BLACK WIRE TIE (*not shown*)

©2026 Valco Industries, Inc.

Hardware - Replacement / Repair Part Numbers

Hardware depicted are not actual size or to scale. Quantities vary.

Hardware used to assemble various components to fiberglass housings:

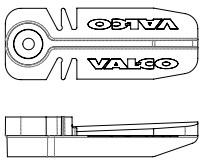

Shutter Clip
936013

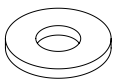

1/4"
Flat Washer
690038

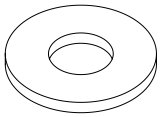

5/16"
Flat Washer
010426 (ZP)
MH8033 (SS)



M3-0.5
Nylock Nut
690490 (SS)

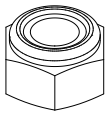

1/4-20
Nylock Nut
012793 (ZP)
MH90043 (SS)

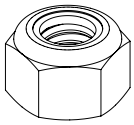

5/16-18
Nylock Hex Nut
012789 (ZP)
MH90044 (SS)

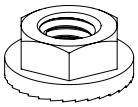

5/16-18
Flanged Hex Nut
501441 (ZP)
MH8056 (SS)

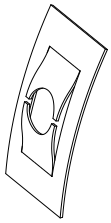

1/4-20
Push Nut
690380

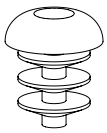

Snap-In
Plastic Plug
(ID.31"-.33")
957019

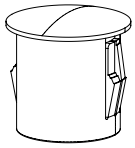

Snap-In
Plastic Plug
(ID.51")
957046

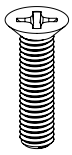

M3-0.5 x 12mm
Flat Head Screw
690489 (SS)

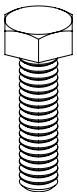

1/4-20 x 1"
Hex Bolt
690025 (ZP)
690343 (SS)

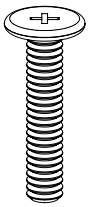

1/4-20 x 1-1/4"
Flat Head Screw
MH90429 (SS)

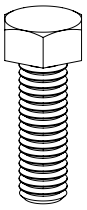

5/16-18 x 1"
Hex Bolt
010645 (ZP)
010431 (SS)

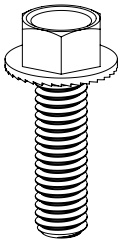

3/8-16 x 1-1/4"
Hex Bolt
936026 (ZP)
MH8124 (SS)

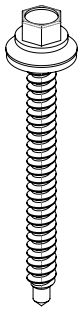

10-12 x 2"
Sheet Metal Screw
936057 (ZP)
MH8206 (SS)

Key:
(SS) = Stainless Steel
(ZP) = Zinc Plated

Hardware shown above can be found in the following Parts Bags:
57" Fans: 957502 (ZP); 957506 (SS)

Knock Down Fan Assembly Fixture (950160) - Drawing and Parts List

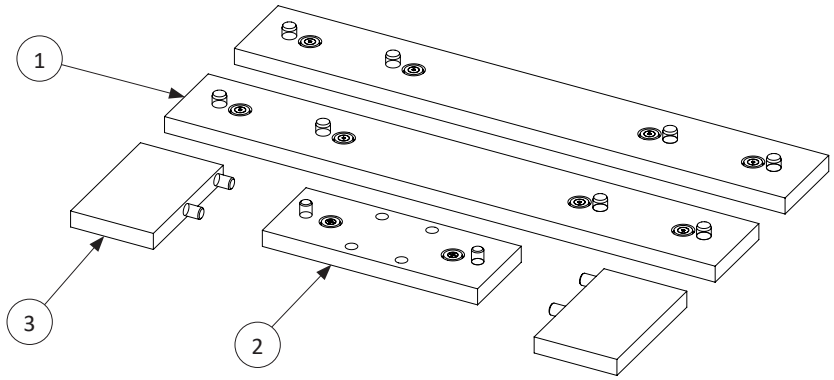

ITEM #	PART #	QTY	DESCRIPTION
KNOCK DOWN FAN ASSEMBLY FIXTURE (950160)			
1	950150	2	VERTICAL ASSEMBLY
2	950155	1	SHAFT LOCATOR BOTTOM ASSEMBLY
3	950159	2	SHAFT LOCATOR TOP ASSEMBLY

©2026 Valco Industries, Inc.