Quick Sheet Instructions

Installation Instructions for Water Line on Flat Top Community Nest

Overview:

This Quick sheet will aid in the installation of either a 1-1/4" or 33mm OD perch pipe with a 1-1/8" (28.6mm) gap above a water line mounted to a flat top community nest. The components to be used are as follows: (1) Regulator Bracket Assembly (P/N: VR201KFT) at the end of each line, (1) Perch Pipe Mounting Bracket (P/N: 631950) at each nest divider (every 4' (122cm) or 2' (61cm) when an expeller is present), (1) Metal Holding Clamp Assembly (P/N: 820669) every 10' along the lines, (1) Plastic Intermediate Pipe Support Kit (P/N: 820672) every 2' between metal holding clamps (total of (5) per 10' section), and (1) End Assemby Kit (P/N: 820670).

Figure 1: Regulator Bracket Assembly

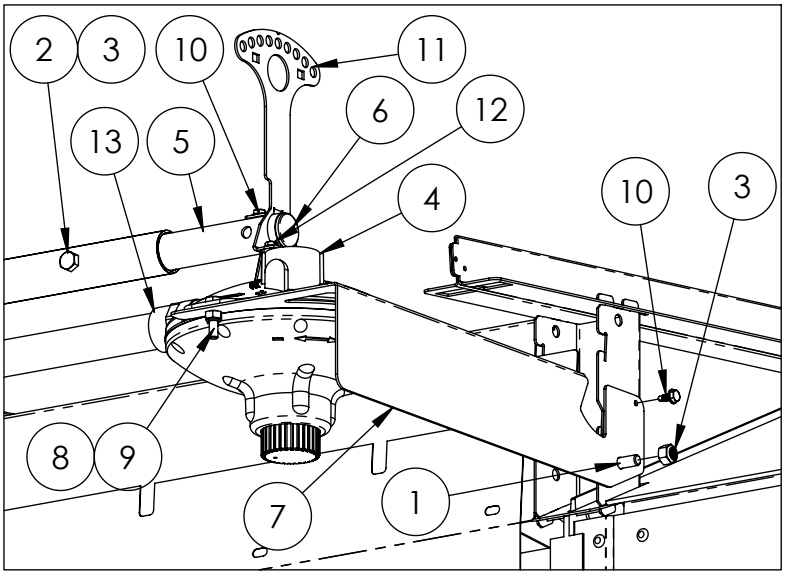

VR201KFT - Regulator Bracket Assembly:

(1) per water line.

Assembly Instructions:

1. Insert 8" coupler (P/N: 631810) into end of pipe as shown and secure with (1) 5/16-18" nut and bolt.
2. Slide perch regulator bracket (P/N: 820659) over end of coupler pipe and secure to regulator (P/N: 12001) with (2) screws (P/N: VRP05-1).
3. Insert plug (P/N: 631815) into end of coupler pipe.
4. Secure coupler pipe in perch regulator bracket with (1) tek screw (P/N: 690112).
5. Assemble flat top regulator bracket (P/N: 631951) to nest using (1) tek screw (P/N: 690112), (1) bolt (P/N: 010643), and (1) nut (P/N: 012789).
6. When connecting the water pipe to the regulator, glue the pipe into adapter (P/N: VT131) using PVC cement and use non-hardening pipe thread sealant on the male end of the adapter going into the regulator. If a flexible standpipe is used, a 3/16" drop cord needs to be run from the ceiling and tied to the anti-tilt bracket so that the standpipe spring can be supported.

Parts List

VR201KFT - Regulator Bracket Assembly			
Item No.	Part No.	Description	Qty
1	010643	5/16-18 X 3/4" HEX BOLT	1
2	010649	5/16-18 X 1-3/4" HEX BOLT	1
3	012789	5/16-18 NYLOCK NUT	2
4	12001	V-MAX REGULATOR FOR VR-201K	1
5	631810	1.05" OD, 8" LONG COUPLER PIPE	1
6	631815	PLUG, 1.05" OD PIPE	1
7	631951	FLAT TOP REGULATOR BRACKET	1
8	690019	1/4-20 HEX LOCK NUT	2
9	690025	1/4-20 X 1" SCREW	2
10	690112	10 X 1/2 TEK SCREW	2
11	820659	PERCH REGULATOR BRACKET	1
12	VRP05-1	REGULATOR BRACKET SCREW	2
13	VT131	ADAPTER, 3/4" MNPT X 3/4" SOC	1

OVER

631950 - Perch Pipe Mounting Bracket:

The perch pipe is connected to the community nest with pipe brackets (P/N: 631950). The pipe brackets fit into the slots on the roof rails (P/N: 631335). A pipe bracket is required at every nest divider (P/N: 631365), so there will be a pipe bracket installed every 4' (or 2' when an expeller is present). A pipe bracket is also required at the roof rail closest to the regulator and end assembly.

Installation Instructions:

Notes:

- This is most easily done before the roof of the nest is installed.
- Slat bracket (P/N: 631361) and pin (P/N: 610072) are not needed where the pipe bracket (P/N: 631950) is installed.
- All pipe brackets (P/N: 631950) should be installed before installing any perch pipes.
- It is possible that the water pipe coupler will line up with a waterline bracket. If that happens, cut the water pipe to make space.

1. Slide the end of the pipe bracket (P/N: 631950) into the slots in the roof rail.
2. Rotate the pipe bracket down until it is sitting flush on the roof rail.
3. (Optional, screws not included) When this system is installed, it is possible for the perch pipe to bounce or be lifted several inches. If desired, one #10-16 x 1/2" Tek screw (P/N: 690112) can be installed in every third pipe bracket (approximately every 12') to more securly attach the brackets to the roof rails.

631950 - Perch Pipe Waterline Bracket		
Item No.	Part No.	Description
1	631950	PERCH PIPE WATERLINE BRACKET
2	690112	#10-16 X 1/2" SELF-DRILLING SCREW

Figure 2: Perch Pipe Mounting Bracket, Step 1

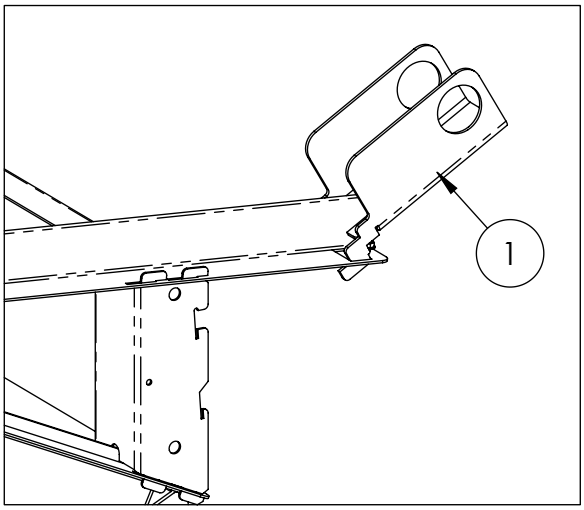

Figure 3: Perch Pipe Mounting Bracket, Step 2

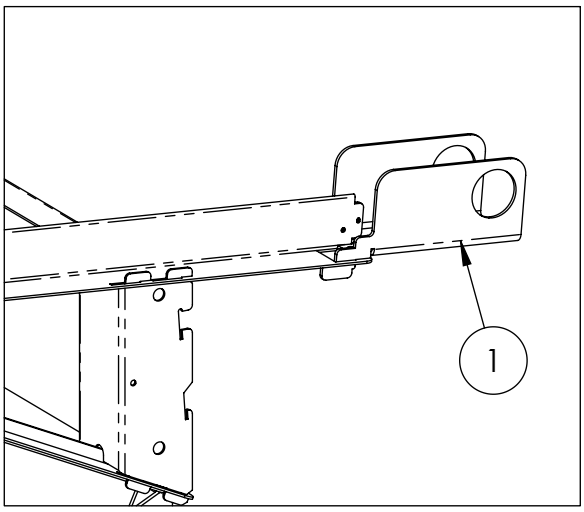

Figure 4: Perch Pipe Mounting Bracket, Step 3

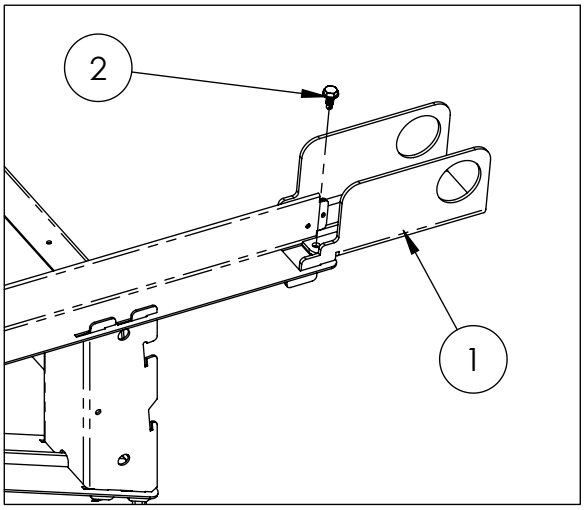

820672 - Plastic Intermediate Pipe Support Assembly:

(5) per 10' (305cm) water pipe. Max 2' (61cm) spacing between plastic intermediate pipe support assemblies (P/N: 820672). Must have (1) assembly 6"-8" (152mm-203mm) from o-ring side of water pipe coupler and at all regulators and in-line kits.

Assembly Instructions:

1. Snap bracket halves together with bottom rivet, then fit one half over pipes as shown in figure 5 to the right.
2. Fit other bracket half over pipes and snap in second rivet as shown in figure 6 to the right. Be sure to place rivet in correct hole, see below.

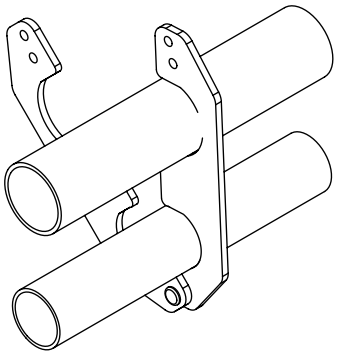

Figure 5: Top open

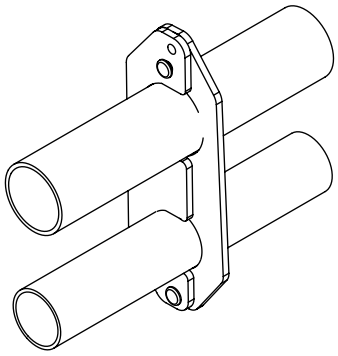

Figure 6: Top closed

NOTE: For 1.25" OD perch pipe, place top rivet in bottom hole of bracket, see figure 7. For 33 mm OD perch pipe, place rivet in top hole of bracket, see figure 8.

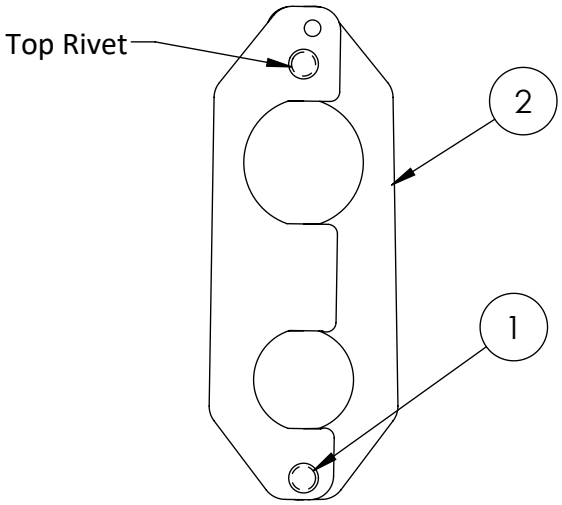

Figure 7: Installation with 1.25" pipe

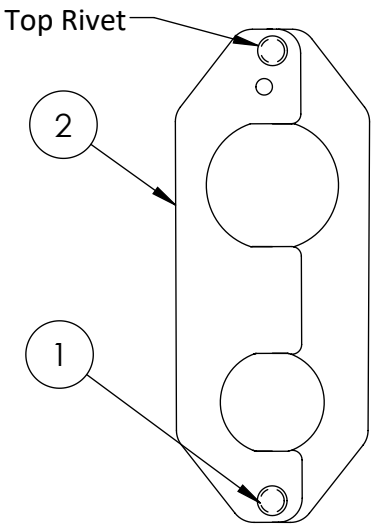

Figure 8: Installation with 33 mm pipe

Parts List

820672 - Plastic Intermediate Pipe Support Assembly			
Item No.	Part No.	Description	Qty
1	640404	Intermediate Pipe Support Rivet	2
2	820655	Plastic Pipe Support Bracket	2

NOTE: 1.25" OD Pipe (P/N: 631865) and Coupler kit (P/N: 631811) sold separately.

820669 - Metal Holding Clamp Assembly:

Every 8'-10' (244cm-305cm), on top of each water line coupler.

NOTE: Metal holding clamp (P/N: 820669) must be assembled after all plastic intermediate pipe supports (P/N: 820672) are fully assembled. A plastic support must be located 6"-8" (152mm- 203mm) from the o-ring side of the coupler.

Assembly Instructions:

1. Align metal clamps over the center of the water line coupler as shown in figure 9 to the right.
2. Insert and tighten carriage bolt (P/N: 690425) through middle.
3. Insert (2) tek screws (P/N: 690112) into metal pipe.

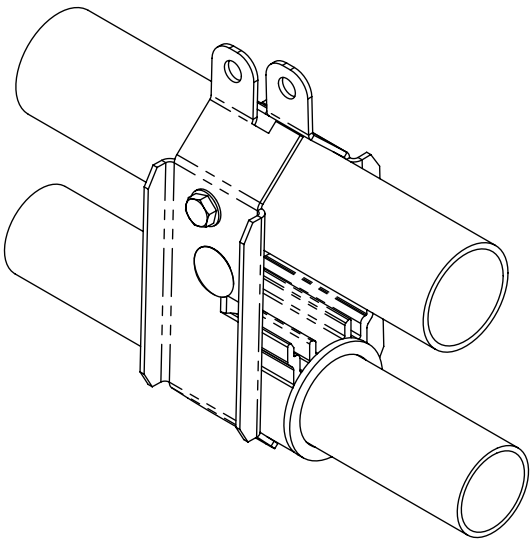

Figure 9: Isometric View of Assembly

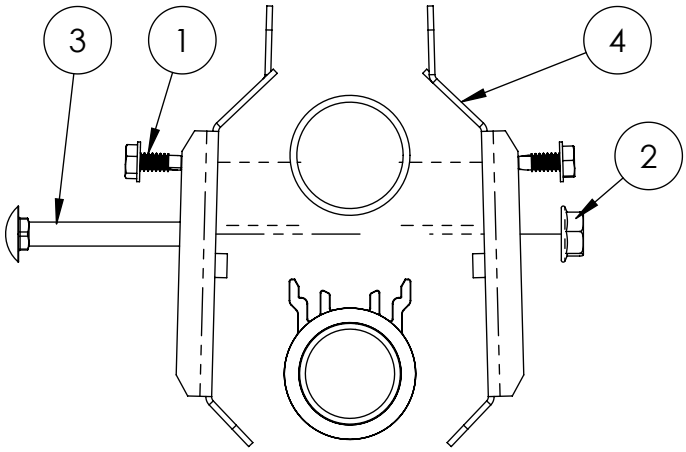

Figure 10: Exploded View of Components

Parts List

820669 - Metal Holding Clamp Assembly			
Item No.	Part No.	Description	Qty
1	690112	10 x 1/2 TEK SCREW	2
2	690236	1/4-20 HEX NUT, SER FLG	1
3	690425	1/4-20 X 1-3/4" CRG BOLT	1
4	820660	HOLDING CLAMP HALF	2

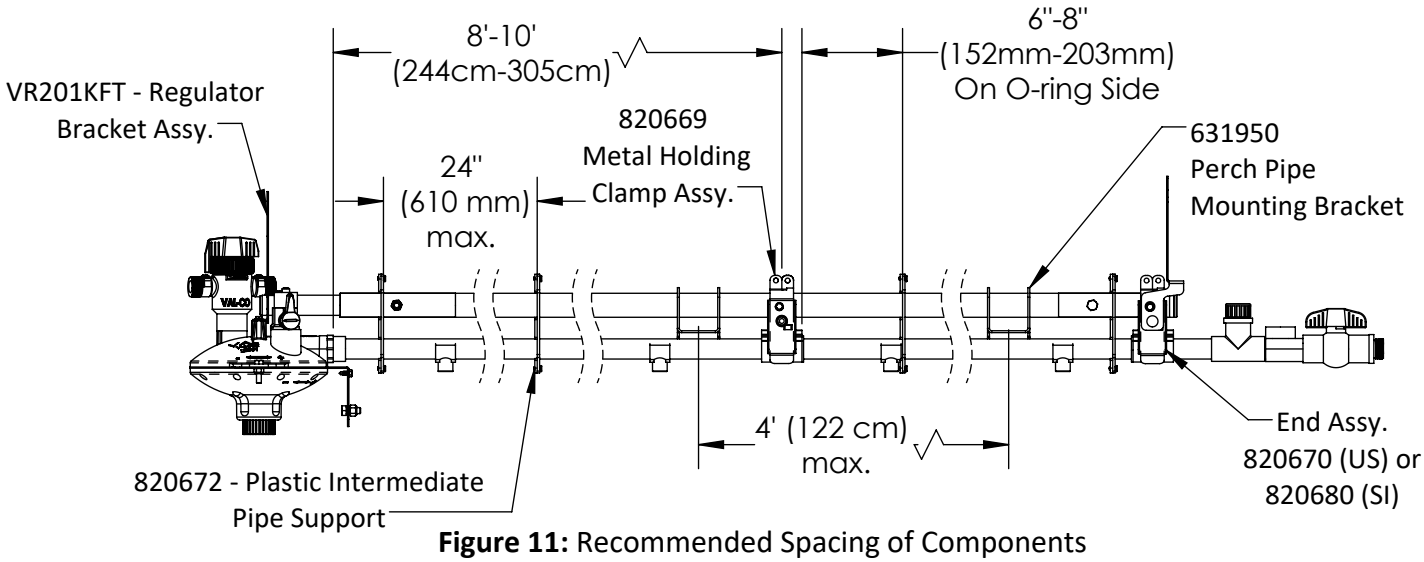

Figure 11: Recommended Spacing of Components

End Assembly - 820670 (US) and 820680 (SI):

(1) Per water line.

Assembly Instructions:

1. Insert end assembly standpipe adapter (P/N: 820641) onto end of water pipe.
2. Use PVC cement to glue garden hose adapters (P/N: VE326 for US, VE326M for SI) and ball valve (P/N: VV801) as shown in figure 12.
3. Align metal holding clamps (P/N: 820660) over the center of the water line coupler.
4. Slide anti-tilt bracket (P/N: 820661) over top of metal clamp halves, aligning square holes.
5. Insert and tighten carriage bolt (P/N: 690425) through both clamp halves (P/N: 820660) and anti-tilt bracket (P/N: 820661).
6. Insert (2) tek screws (P/N: 690112) through the side holes of the anti-tilt bracket (P/N: 820661) into the metal pipe.
7. The end assembly should be supported by a pipe bracket (P/N: 631950) within 6" of the end of the 1.25" metal pipe.
8. Insert plug (P/N: 631812) into the end of the metal pipe.
9. If a hose is connected to the garden hose adapter on the tee, use Zip tie (P/N: PMTT6) to secure hose to the top circular hole in the anti-tilt bracket (P/N: 820661). Close off tee with cap (P/N: 820683 (US) or 820684 (SI)) if not used.

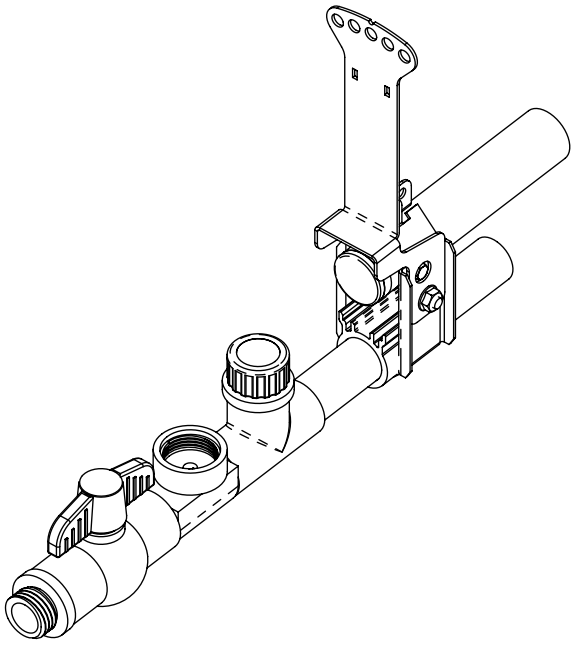

Figure 12 - Isometric View of Assembly

Parts List

End Assembly				
Item No.	Part No.	Description	Qty 820670	Qty 820680
1	631812	PLUG, 1.25" OD PIPE	1	1
2	690002	1/4-20 X 2" CRG BOLT	1	1
3	690112	10 X 1/2 TEK SCREW	2	2
4	690236	1/4-20 HEX NUT, SER FLG	1	1
5	820641	END ASSY STANDPIPE ADAPTOR	1	1
6	820660	HOLDING CLAMP HALF	2	2
7	820661	ANTI-TILT BRACKET	1	1
8	820683	3/4" GARDEN HOSE THREAD CAP, US	1	0
9	820684	3/4" GARDEN HOSE THREAD CAP, SI	0	1
10	PMTT6	WIRE TIE, 7.5"	1	1
11	VE326	GARDEN HOSE ADAPTER	2	0
12	VE326M	GARDEN HOSE ADAPTER, METRIC	0	2
13	VV801	3/4" BALL VALVE, SCH 80	1	1

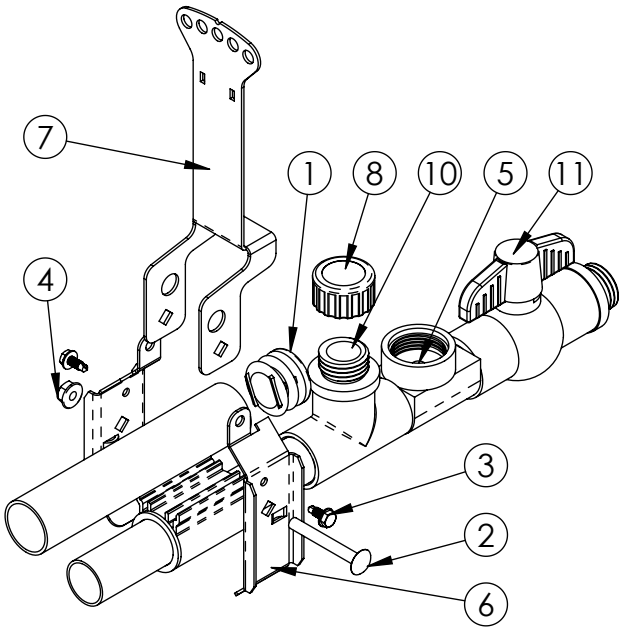

Figure 13 - Exploded View of Components
820670 - US version shown.

VR204KL - Mid-line Slope Regulator Assembly:

Adjustable regulator to be used as needed to correct slope across a line. Water must run downhill.

Assembly Instruction:

1. Cut metal pipe at desired location for slope regulator.
2. Insert 8" coupler into one end of cut pipe. Drill 11/32" (9mm) hole and use appropriate nut and bolt to secure coupler.
3. Slide regulator bracket over coupler pipe.
4. Insert 8" coupler into the other cut end of pipe. Ensure that the 1.05" coupler section is wide enough to avoid interference with installation of standpipe bases, approximately 4" (100 mm). Drill hole and secure with nut and bolt.
5. Secure regulator to bracket with (2) screws (P/N: VRP05-1).
6. Regulator should be secured to the nest with a pipe bracket (P/N: 631950) at the closest roof rail (P/N: 631335). If a flexible standpipe is used, a 3/16" drop cord needs to be run from the ceiling and tied to the anti-tilt bracket so that the standpipe spring can be supported.

Parts List

VR204KL - Slope Regulator Bracket Assembly			
Item No.	Part No.	Description	Qty
1	010649	5/16-18 X 3/4" HEX BOLT	2
2	012789	5/16-18 NYLOCK NUT	2
3	12004	V-MAX SLOPE REGULATOR	1
4	631810	PIPE, 1.05" OD, 8" LG, W/ HOLES	1
5	690112	10X 1/2" TEK SCREW	1
6	820659	BRACKET, REGULATOR	1
7	VRP05-1	#12 X 3/4" SCREW	2

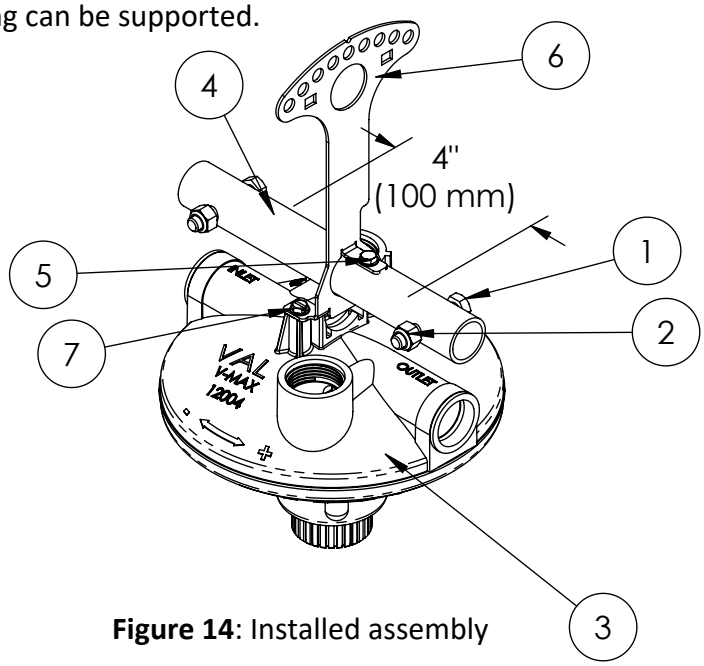

Figure 14: Installed assembly

In-line Slope Regulator/ Air Release Kits:

Use (1) in-line slope regulator kit to remove 5" (127mm) of standpipe pressure gained from a sloped line. Multiple fixed in-line slope regulators may be used, but must not exceed (4) before requiring the use of a VR204KL adjustable mid-line slope regulator.
Air release kits let out air from the lines with no impact on pressure/slope. Use as needed.
Shut-off assemblies include an air release and a ball valve. See next page for drawings and parts lists.

Assembly instructions:

1. Install desired in-line kit onto the water line, cutting water pipe to proper length as needed.
2. Attach all plastic and metal brackets as instructed in previous pages of quicksheet. Ensure that a plastic support assembly (P/N: 820672) is within 8" of both sides of the in-line assembly.
3. Slide anti-rotation bracket (P/N: 820743) over legs on bottom of slope regulator body, as shown in figure 14.
4. While holding bracket flush to bottom of slope regulator, insert provided tek screw (P/N: 690112) into metal pipe.

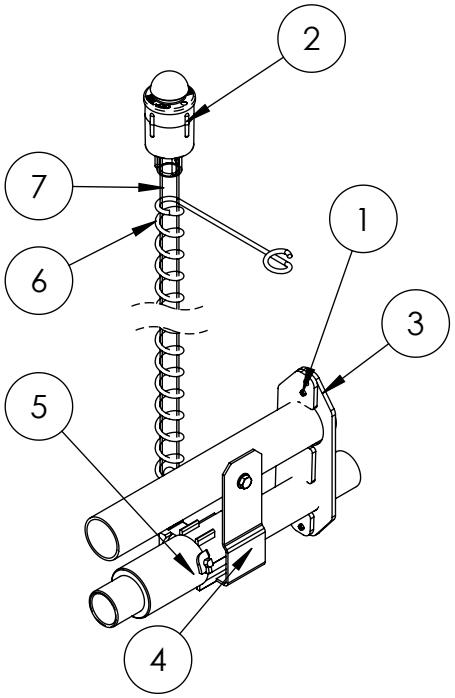

Figure 15: Installed Components (820752 Shown)

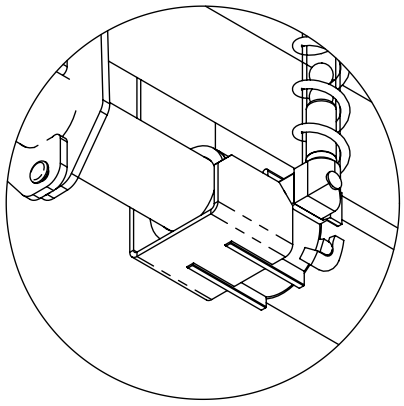

Figure 16: Bottom view

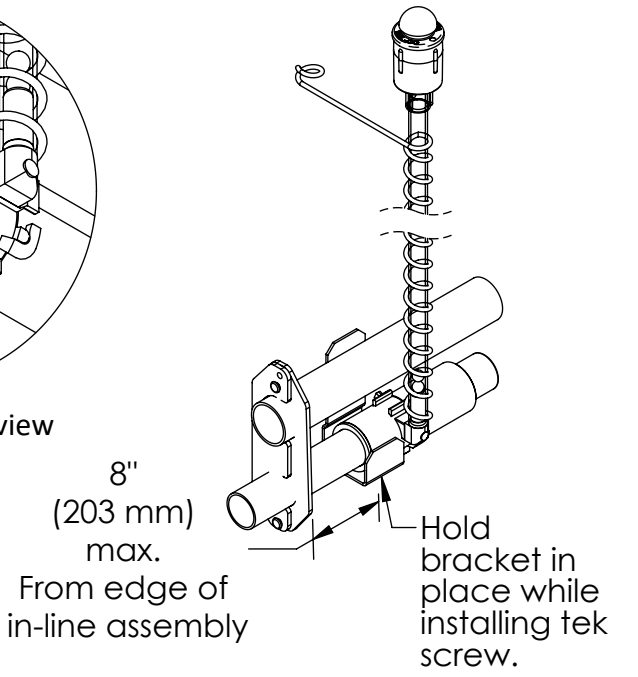

Figure 17: Recommended Spacing and Installation (820752 shown)

Parts List

820752, 820753, 820754, 820755, 820756, 820757 - Slope Regulator Assemblies - Common Parts								
Item #	Part #	Description	820752	820753	820754	820755	820756	820757
1	640404	Rivet for Pipe Support	2	2	2	2	2	2
2	820227	Hardware Bag, Flat Cap, Flex	0	1	0	1	0	1
	820349	Hardware Bag, Truseal, Flex	1	0	1	0	1	0
3	820655	Plastic Pipe Support Bracket	2	2	2	2	2	2
4	820744	Anti-Rot Bracket Kit	1	1	1	1	1	1
5	VR209P	Slope Regulator, Automatic Flush	1	1	1	1	1	1
6	VS130	18" Spring, for Flex	1	1	0	0	0	0
	VS132	24" Spring, for Flex	0	0	1	1	0	0
	VS133	30" Spring, for Flex	0	0	0	0	1	1
7	VSP18FX	18" Flex Standpipe	1	1	0	0	0	0
	VSP24FX	24" Flex Standpipe	0	0	1	1	0	0
	VSP30FX	30" Flex Standpipe	0	0	0	0	1	1

Additional Parts Lists

820758, 820759, 820760, 820761 - Air Release Assemblies - Common Parts						
Item #	Part #	Description	820758	820759	820760	820761
1	640404	Rivet for Pipe Support	2	2	2	2
2	820227	Hardware Bag, Flat Cap, Flex	0	1	0	1
	820349	Hardware Bag, Truseal, Flex	1	0	1	0
3	820655	Plastic Pipe Support Bracket	2	2	2	2
4	820744	Anti-Rot Bracket Kit	1	1	1	1
5	VR209S	Air Release w/ "L" Stem	1	1	1	1
6	VS132	24" Spring, for Flex	1	1	0	0
	VS133	30" Spring, for Flex	0	0	1	1
7	VSP24FX	24" Flex Standpipe	1	1	0	0
	VSP30FX	30" Flex Standpipe	0	0	1	1

820762, 820763, 820764, 820765, 820766, 820767 - Air Release Shut Off Assemblies - Common Parts								
Item #	Part #	Description	820762	820763	820764	820765	820766	820767
1	640404	Rivet for Pipe Support	2	2	2	2	2	2
2	820227	Hardware Bag, Flat Cap, Flex	0	1	0	1	0	1
	820349	Hardware Bag, Truseal, Flex	1	0	1	0	1	0
3	820655	Plastic Pipe Support Bracket	2	2	2	2	2	2
4	820744	Anti-Rot Bracket Kit	1	1	1	1	1	1
5	VR209S	Air Release w/ "L" Stem	1	1	1	1	1	1
6	VS130	18" Spring, for Flex	1	1	0	0	0	0
	VS132	24" Spring, for Flex	0	0	1	1	0	0
	VS133	30" Spring, for Flex	0	0	0	0	1	1
7	VSP18FX	18" Flex Standpipe	1	1	0	0	0	0
	VSP24FX	24" Flex Standpipe	0	0	1	1	0	0
	VSP30FX	30" Flex Standpipe	0	0	0	0	1	1
8	VV801	3/4" Ball Valve, Sch 80	1	1	1	1	1	1