POLAIR™

Model 400HC

Installation and Operation Manual

PM-063-003K Revised February 23, 2024

CONTROLLER Software copyright 2013 Val-co®.
The Val-co® logo is a registered trademark of Val-co®.
Pol*AIR*™ is a trademark name of this Val-co® Control.
Carol is a registered trademark of General Cable Industries, Inc.
Litelfuse is a registered trademark of Litelfuse, Inc.
Bussmann is a registered trademark of Cooper Industries, Inc.
Copyright © 1999-2024 Val-co®. All rights reserved.
Printed in the USA



VAL PRODUCTS, INC. PRODUCT WARRANTIES

VAL-C0® MANUFACTURED PRODUCTS OTHER THAN EXTENDED WARRANTY PRODUCTS

Val Products, Inc. (Val Products) warrants to the original purchaser that Val Products' manufactured products (other than the products subject to an extended warranty set forth below) will be free of defects in material and workmanship for a period of one (1) year from and after the date of original purchase and when used in a usual and customary fashion. If Val Products is notified that such a defect exists within one year of the original purchase date and, upon inspection, agrees that the product is defective, Val Products will, at its option, (a) repair or replace (FOB Val Products' plant) the defective product, or (b) refund to the original purchaser the original purchase price paid for the defective product less any installation, shipping, or other charges associated with the original purchase. All defective products must be returned to a Val Products designated location for evaluation. Val Products' determination as to whether the product is defective is final. See the General Conditions and Limitations set forth below.

VAL-CO Standard Plus Extended Warranties

Product	Normal Warranty Coverage Period(1)	Extended Limited Warranty Coverage Period(2)	Total Warranty Coverage Period(3)
VR & VBL Series Drinkers	5 Years	5 Years	10 Years
VQ & VB-BN Series Drinkers	2 Years	3 Years	5 Years
Roll Formed Tube	3 Years	7 Years	10 Years
Coreless Auger (Moisture Content less than 18%)	3 Years	7 Years	10 Years
Fuze® ProLine Feeder Pans	2 Years	3 Years	5 Years
Fiberglass Fan Housings	Lifetime(4)	**N/A**	Lifetime(4)
Aluminum Fan Blades	Lifetime(4)	**N/A**	Lifetime(4)
Fan Motors	2 Years(5)	N/A	2 Years(5)

Explanations/Conditions of above listed footnotes for VAL-CO warranties:

(1) "Normal warranty coverage period" is subject to the conditions of VAL-CO's standard one year warranty policy.

(2) "Extended limited warranty coverage" will be provided at a charge rate of 50% off the VAL-CO List Price for an item at the time the warranty claim is made known to the company in writing, and is subject to VAL-CO's standard warranty policy conditions and limitations.

(3) "Total warranty coverage period" is the sum of periods for the "normal warranty coverage period" plus the length of the "extended limited warranty coverage period", and is subject to VAL-CO's standard warranty policy conditions and limitations.

(4) The "Lifetime" warranty for fiberglass fan housings manufactured by Val Products is limited to PMC Power Miser 12", 16", 21", 24", 36", 48", and 50" Fiberglass Fans that prove to be defective in workmanship or material and become unusable over the life of the structure where the VAL-CO Fiberglass Fan was originally installed after original purchase, provided that the fan has remained undisturbed in its original installation location, will be repaired or replaced, at Val Products' option, at no charge (excluding labor of removal and installation and shipping), FOB Val Products' plant. All defective fan housings must be returned to a Val Products' designated location for evaluation. Val Products' determination as to whether the product is defective and unusable is final. See the General

Conditions and Limitations set forth below.
(5) This fan motor warranty is limited to the motors used in with respect to the fiberglass fan motors included as original equipment on VAL-CO PMC Power Miser 12", 16", 21", and 24" Fiberglass Fans manufactured by Val Products that prove to be defective in workmanship or material and become unusable within a period of two (2) years from and after the date of original purchase will be repaired or replaced, at Val Products' option, at no charge (excluding labor of removal and installation and shipping), FOB Val Products' plant. All defective fan motors must be returned to a Val Products' designated location for evaluation. Val Products' determination as to whether the product is defective and unusable is final. See the General Conditions and Limitations set forth below.

General Conditions and Limitations Applicable to All Val Products, Inc. (Val Products) Warrants, Including Extended Warranties

1. The Product must be installed and operated in accordance with instructions published by Val Products or the warranty will be void.
2. Warranty will be void if all components of the product or system are not original equipment supplied by the manufacturer.
3. Products not manufactured by Val Products and supplied by outside manufacturers (such as, but not limited to, certain electrical motors, certain controls, gas valves, etc.) are warranted separately by the respective manufacturer and only to the extent of the manufacturer's warranty.
4. Warranty applies only to products used in applications as originally intended by Val Products – other applications in industry or commerce are not covered by the Warranty. Val Products' products are expressly not designed or authorized for use in any applications where intended to sustain or support human life or any other application where the failure of the product could result in personal injury or death.
5. Malfunctions resulting from misuse, abuse, mismanagement, negligence, alteration, accident, lack of proper maintenance, lightning strikes, electrical power surges, or electrical power interruption shall not be considered defects under the Warranty. Corrosion, material deterioration and/or equipment malfunction caused by or consistent with the excessive additions of chemicals, minerals, sediments or other foreign elements with the product shall not be considered defects under the Warranty.
6. VAL PRODUCTS WILL NOT, UNDER ANY CIRCUMSTANCES, BE LIABLE FOR ANY KIND OF SPECIAL, INCIDENTAL, CONSEQUENTIAL, OR CONTINGENT DAMAGES INCLUDING, BUT NOT LIMITED TO, LOST OR DAMAGED PRODUCT, GOODS OR LIVESTOCK, COSTS OF TRANSPORTATION, LOST SALES, LOST ORDERS, LOST INCOME, INCREASED OVERHEAD, LABOR AND INCIDENTAL COSTS AND OPERATIONAL INEFFICIENCIES. IN NO EVENT SHALL THE WARRANTY LIABILITY EXCEED THE INVOICED PRICE OF THE PRODUCT TO THE ORIGINAL PURCHASER.
7. THE WARRANTIES SET FORTH ABOVE CONSTITUTE VAL PRODUCTS' ENTIRE AND SOLE WARRANTY. VAL PRODUCTS EXPRESSLY DISCLAIMS ANY AND ALL OTHER WARRANTIES INCLUDING, BUT NOT LIMITED TO, ANY AND ALL OTHER EXPRESS OR IMPLIED WARRANTIES AS TO THE MERCHANTABILITY, FITNESS FOR A PARTICULAR PURPOSE OR USE, DESCRIPTION OF QUALITY OF THE PRODUCT FURNISHED, AND ANY OTHER WARRANTY ARISING BY OPERATION OF LAW, CUSTOM OR USAGE.
8. Val Products denies any authorization of any distributor, dealer, agent, or employee to modify, extend, or otherwise alter the conditions of any warranty in addition to, or in lieu of, those conditions and terms expressly stated above. Any exceptions not noted in the body of the Warranty must be authorized in writing by an offer of Val Products. Val Products reserves the right to change or delete models, or change specifications at any time without notice or obligation to improve previous products

Table of Contents

OVERVIEW **5**
OPERATING MODES 6
INSTALLATION **8**
YOU'VE HEARD IT BEFORE… 8
CIRCUIT PROTECTION 8
POWER SUPPLY 9
POL*AIR* CONTROLLER 10
CONDUIT AND CONNECTIONS 11
SENSOR WIRING 11
SENSOR PLACEMENT 12
SENSOR CONNECTIONS 12
HOST CONTROL INPUT 15
JUMPERS 16
OUTPUT CHANNELS 16
OPERATION **233**
OPERATING CYCLE 233
OPERATING MODES 244
PROGRAMMING THE CONTROLLER 255
FIRST TIME SETUP FUNCTIONS 266
FUNCTION SELECTIONS FOR SINGLE ZONE, HOST CONTROL MODE 288
FUNCTION SELECTIONS FOR TWO ZONE, HOST CONTROL MODE 30
FUNCTION SELECTIONS FOR SINGLE ZONE, STAND-ALONE MODE 322
FUNCTION SELECTIONS FOR TWO ZONE, STAND-ALONE MODE 355
TROUBLESHOOTING **399**
SPECIFICATIONS **411**
PARTS DIAGRAM **422**
POL*AIR* 400 HC 23 AMP MODEL 422
POL*AIR* 400 HC 43 AMP MODEL 422
POL*AIR* 400 HC 60 AMP MODEL 433
CUSTOMER SERVICE **444**

AS WITH ANY SOPHISTICATED CONTROL SYSTEM, THIS CONTROLLER CANNOT BE GUARANTEED TO PERFORM WITHOUT INCIDENT FOREVER. THERE ARE MANY CONDITIONS SUCH AS LIGHTNING STRIKES, PROGRAMMING ERRORS, AND EQUIPMENT FAILURE THAT COULD RESULT IN THIS CONTROLLER FAILING TO PERFORM ITS INTENDED FUNCTION. YOU MUST BE AWARE OF THIS AND BE WILLING TO TAKE THE NECESSARY PRECAUTIONS TO PREVENT FINANCIAL LOSS.

TO PROTECT AGAINST LOSS RELATED TO THE FAILURE OR MALFUNCTION OF THIS CONTROLLER, THE FOLLOWING SAFEGUARDS ARE REQUIRED:

1. A MANUAL BACKUP SYSTEM MUST BE INSTALLED. THIS SYSTEM MUST TAKE OVER IN THE EVENT OF A CONTROL SYSTEM MALFUNCTION.

2. AN ALARM SYSTEM MUST BE INSTALLED. THIS SYSTEM MUST PROVIDE A VISUAL INDICATION AND AUDIBLE WARNING OF ABNORMAL CONDITIONS.

3. A WEEKLY TEST OF THE MANUAL BACKUP SYSTEM AND ALARM SYSTEM MUST BE PERFORMED. THIS TEST CONFIRMS THAT THESE SYSTEMS ARE FUNCTIONING PROPERLY.

4. A DAILY CHECK OF THE CONTROL SYSTEM MUST BE PERFORMED. THIS CHECK CONFIRMS THAT THE SYSTEM IS OPERATING PROPERLY.

5. NON-FUNCTIONAL ALARMS OR BACKUPS MUST BE FIXED IMMEDIATELY.

Overview

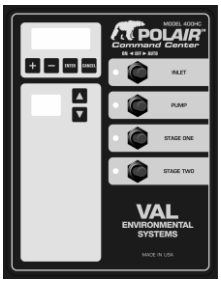

POL*AIR's* advanced microprocessor-based design makes it possible to regulate your evaporative cooling devices with far greater precision than with conventional thermostats and timers.

The POL*AIR* was developed to run either independently or as a slave to a host control. Output channels can be easily configured to match your use.

Using the POL*AIR* as a slave unit to an existing controller provides several benefits over operating evaporative cooling equipment directly from the existing controller. The POL*AIR* provides you with:

- Pump motor protection by testing for low water pressure (the motor will not run when low water pressure is detected).
- A contactor for the motor (allowing for a 23, 43 or 60 amp circuit depending on the POL*AIR* model you have).
- Humidity override to prevent evaporative cooling when the humidity is too high.
- Stress index cutoff.
- Control of a high-pressure relief solenoid to drain the water system during off times so water doesn't leak into your building.

Four channels appear on the face, but there are six output channels available. Output channels 5 and 6 control drains for stage 1 (channel 3) and stage 2 (channel 4). These release pressure and allow the evaporative cooling lines to drain at the end of each pump cycle.

Operating with a host controller, the POL*AIR* requires no other temperature or humidity inputs. Attaching optional temperature sensors will allow the POL*AIR* to backup the host controller by turning on evaporative cooling if the temperature rises above the ON Temp you have set in the POL*AIR*.

In a stand-alone mode, the POL*AIR* can be set to disable evaporative cooling if humidity is above the level for effective evaporative cooling.

A low pressure sensor input protects the motor from starting before water pressure has built up at the pump water input.

Operating Modes

The POL*AIR* can be set up to run in one of four different modes:

1. **Single zone, controlled by a host controller.** Signals (closed relays) from the host controller turn on stages 1 and 2 (channels 3 and 4). If temperature sensors are installed, their readings are averaged and they can be used as a backup to the host controller's signals. For example, you can set ON Temps for stages 3 and 4 based on the average temperature reading. If the host controller fails, the stages will still operate when the ON Temps are reached.

2. **Two zone, controlled by a host controller.** Signals from the host controller turn on stages 1 and 2 (channels 3 and 4). If temperature sensors are installed, their readings are used independently (not averaged) as a backup to the host controller's signals. For example, you can set an ON Temp for stage 1 based on temperature sensor #1's reading. If the host controller fails, stage 1 will still operate when the ON Temp is reached.

3. **Single Zone, stand-alone controller.** Temperature readings are averaged and used with the humidity sensor reading to control stages 1 and 2 (channels 3 and 4). There is no input for host control.

4. **Two-zone, stand-alone controller.** Temperature and humidity are separated into two zones according to the sensor number. The temperature and humidity readings in zone 1 controls stage 1 (channel 3). The temperature and humidity readings in zone 2 controls stage 2 (channel 4).

The term "two-zone" means you can control two separate areas since the temperature and humidity reading in each area only controls its related stage (see illustration on the next page).

Single Zone - Host Control

Input Channel Number	Input Device	Behavior	Output Channels
IN1	Temperature Sensor 1 (optional)	Temp readings are averaged	Stage 1 (channel 3)
IN2	Temperature Sensor 2 (optional)		Stage 2 (channel 4)
IN3	Host Control Signal 1	On signal overrides Temp On settings	Stage 1 (channel 3)
IN4	Host Control Signal 2		Stage 2 (channel 4)
ENAB	Low Pressure Sensor (optional)	Hi or Lo signal	Pump won't start on Lo signal

Two Zone - Host Control

Input Channel Number	Input Device	Behavior	Output Channels
IN1	Temperature Sensor 1 (optional)	Controls Stage 1	Stage 1 (channel 3)
IN2	Temperature Sensor 2 (optional)	Controls Stage 2	Stage 2 (channel 4)
IN3	Host Control Signal 1	On signal overrides Temp On settings	Stage 1 (channel 3)
IN4	Host Control Signal 2		Stage 2 (channel 4)
ENAB	Low Pressure Sensor (optional)	Hi or Lo signal	Pump won't start on Lo signal

Single Zone - Standalone Control

Input Channel Number	Input Device	Behavior	Output Channels
IN1	Temperature Sensor 1	Temp readings are averaged	Stage 1 (channel 3)
IN2	Temperature Sensor 2 (optional)		Stage 2 (channel 4)
IN3	Humidity Sensor 1 (optional)	Controls Stage 1 and Stage 2	Stage 1 (channel 3)
IN4	Not Used		Stage 2 (channel 4)
ENAB	Low Pressure Sensor (optional)	Hi or Lo signal	Pump won't start on Lo signal

Two Zone - Standalone Control

Input Channel Number	Input Device	Behavior	Output Channels
IN1	Temperature Sensor 1	Controls Stage 1	Stage 1 (channel 3)
IN2	Temperature Sensor 2	Controls Stage 2	Stage 2 (channel 4)
IN3	Humidity Sensor 1 (optional)	Controls Stage 1	Stage 1 (channel 3)
IN4	Humidity Sensor 2 (optional)	Controls Stage 2	Stage 2 (channel 4)
ENAB	Low Pressure Sensor (optional)	Hi or Lo signal	Pump won't start on Lo signal

POLAIR Summary.vsd

Installation

You've Heard It Before…

Do not connect or disconnect wires while the power is on. The warranty does not cover damage caused by improper handling.

Always touch a grounded surface before working on electronic equipment. Static shocks can destroy sensitive electronic circuits.

A good ground for your electrical system and the controller is essential. A good ground is a water pipe or a buried copper rod. Electrical conduit is often **not** grounded.

When attaching wires to terminals, first strip off about ¼" of insulation. If you attach more than one wire to a terminal, twist the leads together before securing them to the terminal.

Tighten terminal screws securely, being careful not to over tighten them. Gently tug on the wires to make sure they are tight.

Circuit Protection

The controller should be wired to an independent circuit breaker. Ideally each equipment output channel should have its own breaker to insure that tripping one breaker will not affect other devices in the ventilation system.

Motors must have a thermal overload protection device or impedance protection. The overload should auto-reset for any essential part of your evaporative cooling system.

Deadbolt™ Power Surges

The controller is protected against *normal* voltage surges, but lightning induced surges could damage the equipment. We recommend use of a Deadbolt surge suppressor to reduce the potential of damage from lightning. Lightning damage is not covered by the warranty.

Power Supply

The POL*AIR* controller can be operated on 115 or 230 VAC. The input voltage is selected by changing the transformer switch in the lower right corner of the box. Set the switch and connect 115 or 230 VAC to the power terminal block.

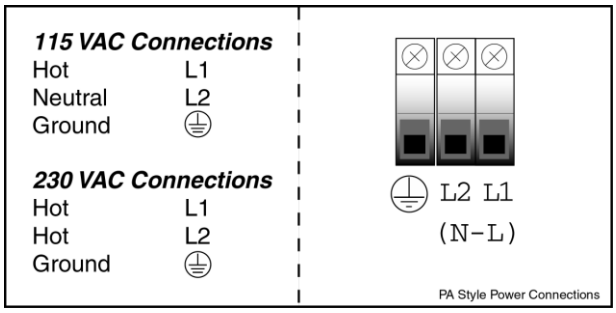

- A main power disconnect must be provided by the installer to allow the controller to be shut off.
- The torque rating for the power input terminals is 4.4 to 5.3 inch-pounds.
- Use 18 to 14 AWG gauge wire.
- The metal backplate is grounded when a ground wire is properly attached to the ground ⏚ terminal (shown above).

POL*AIR* Controller

The controller must be mounted indoors where the temperature will remain between 30 degrees Fahrenheit (- 1 degree Celsius) and 110 degrees Fahrenheit (43 degrees Celsius). Do not mount the unit in direct sunlight. The controller should be mounted in a room separate from where the animals are located and free from dust, water spray and corrosive fumes.

Mounting brackets for the controller are enclosed with the POL*AIR*. Attach these to the back of the enclosure before mounting it in the building.

Drill holes in the controller enclosure with care. Make sure you do not drill into circuit boards and cables.

Note: Unless absolutely necessary, do not remove the electrical boards. They are static sensitive and should always be handled with appropriate grounding.

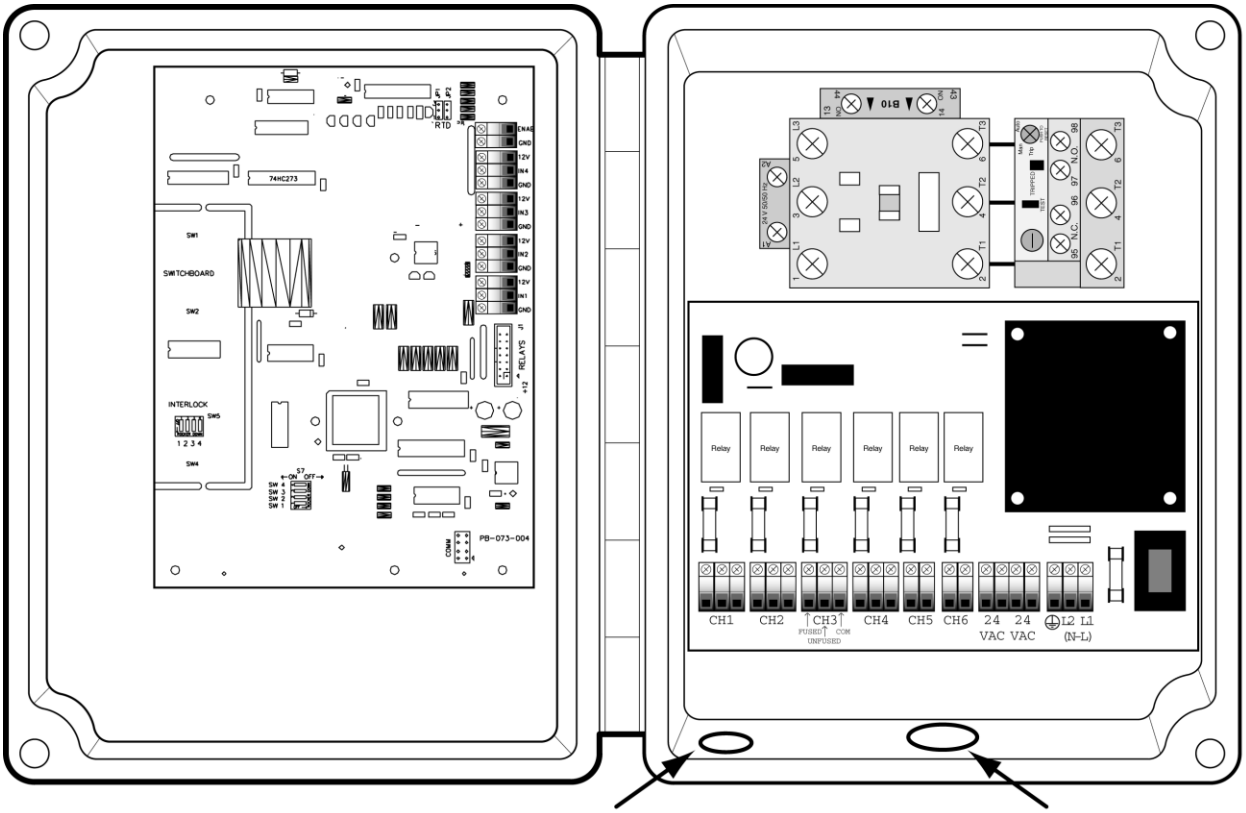

Low voltage sensor wires should be brought through the bottom left of the enclosure and secured with mounting pads and cable ties (but leave enough slack to open and close the front panel).

High voltage power wires should be brought through the bottom center of the enclosure.

Wire Polair.eps

Conduit and Connections

High voltage wires should enter the controller's enclosure from the bottom so they can be easily connected to the terminals.

To avoid electrical shorts or damage due to moisture, you should never run conduit openings through the top of the box. Conduit and hubs should be corrosion resistant plastic or fiberglass. Use only UL approved NEMA 4X rated conduit hubs. Connect hubs to conduit before connecting to the controller. Use only liquid-tight strain-relief connectors to bring cables into the enclosure.

Clearance Holes for Standard Conduit

Trade Size (inches)	Hole Size (inches)
1/2	0.875
3/4	1.125
1	1.375
1 1/4	1.750
1 1/2	2.000
2	2.500
2 1/2	3.000
3	3.625

Conduit Hole Sizes.eps

Sensor Wiring

Use shielded 16 to 24 gauge (.5-1.5mm) stranded wire, such as Carol® AWM style 2426, to connect sensors to input channels. Wire can be twisted pair or straight type.

Low voltage sensor cables inside the enclosure should be secured with mounting pads and cable ties.

Wire Spacing

If a sensor cable runs parallel to power cables, allow a separation of at least 12" (30cm) to avoid interference.

Note: Do not run sensor cables through conduit with power wires.

Sensor Placement

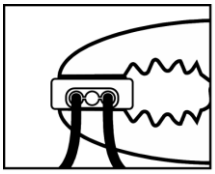

3M Scotchlok® connectors are recommended for splicing (22-24 gauge wire only). Apply firm, even pressure to a button to ensure good contact. The button will be flush when properly sealed.

Sensors should be placed near the animals—knee to waist level for poultry and chest to eye level for hogs—out of direct sunlight and away from heaters. They should be placed where they will stay dry.

Systems using one temperature sensor and/or one humidity sensor should place it approximately in the center of the building or zone. Systems using two temperature sensors and/or two humidity sensors should have sensors placed approximately one third from each end of the building. If the building is tunnel ventilated, move sensors farther toward the output fans.

Leave enough wire so you can tie up several loops of slack to keep the sensor at the right height. If you must replace a sensor in the future, the extra length allows you enough wire to cut off the old sensor and still have plenty to splice to the new sensor.

The sensors you connect depends on whether you will operate the POL*AIR* with a host controller or as a stand-alone unit. Refer to the illustration in the *Operating Modes* section for the various sensor inputs.

Sensor Connections

Temperature Sensors

The POL*AIR* temperature sensors are resistance-based electronic devices so the wire gauge and length affect their readings. During installation, record wire gauge and length for each temperature sensor. This information will be entered into the controller (refer to the *Programming the Controller* section of this manual). Wire gauge and length do not affect humidity readings.

When connecting a temperature sensor, connect the black lead to the GND terminal, and the red lead to the INput terminal just above the GND terminal.

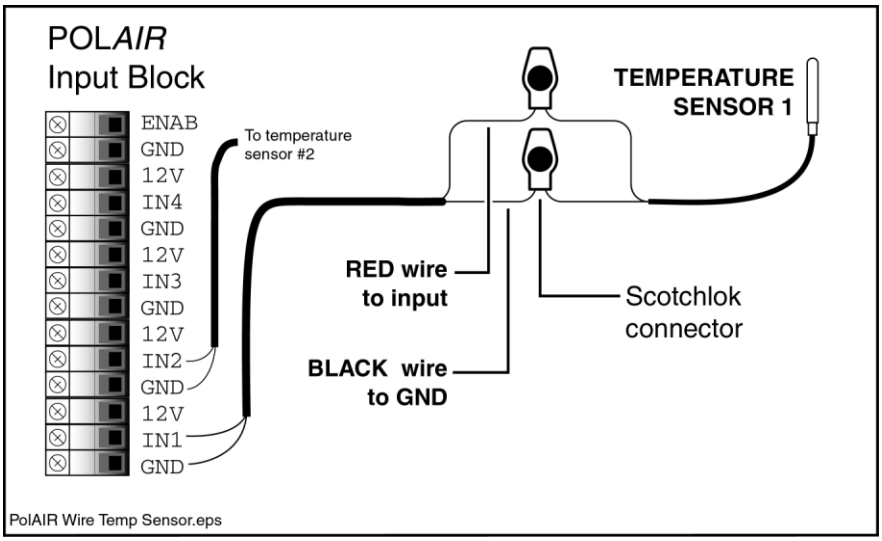

Humidity Sensors

When connecting a humidity sensor, connect the black lead to the GND terminal, the red lead to the 12V terminal, and the green lead to the INput terminal.

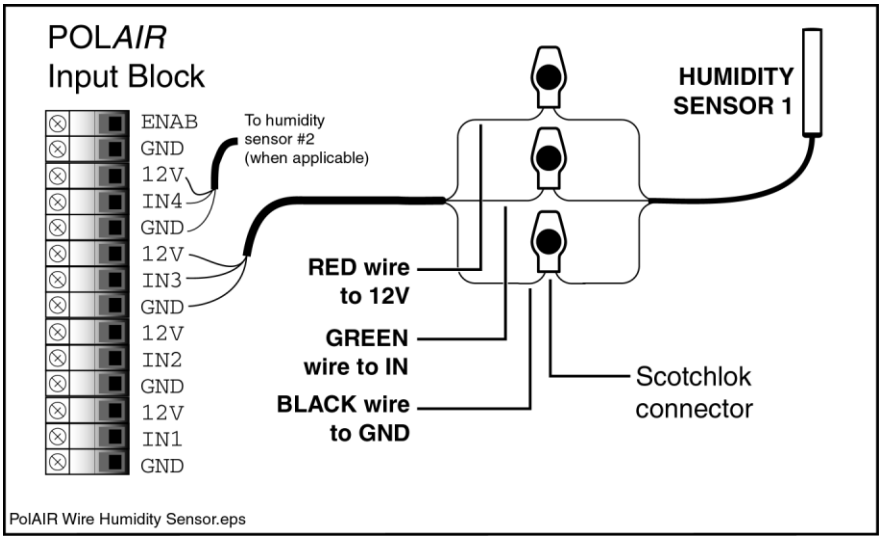

Note: If you are using only one humidity sensor, put a jumper between the INput 4 terminal and the GND terminal just below it. If you are not using any humidity sensors, put a jumper between INput3 and its GND and INput 4 and its GND. The jumper(s) will prevent false readings from occurring for the nonexistent humidity sensor(s).

Low Pressure Input

The low pressure sensor is attached to the high pressure pump input (ENAB).

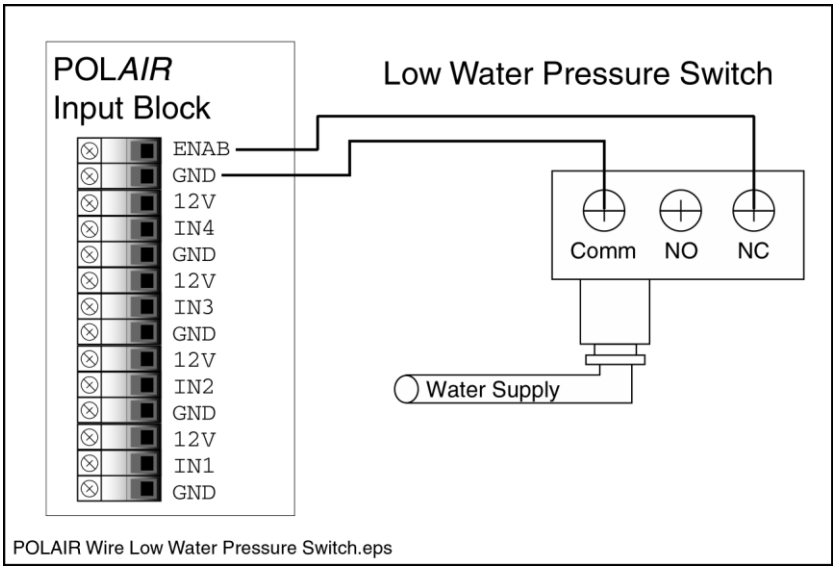

Host Control Input

If you use the POL*AIR* to detect a "signal" from a controller indicating evaporative cooling should be turned on, attach the host controller's output to the POL*AIR's* INput 3 (and INput 4 if you are using two stages). The controller's output must be a no-voltage relay.

Do not apply voltage to input!

The host control output to the POL*AIR* should be a normally open relay. The POL*AIR* turns on evaporative cooling when the host control closes the relay.

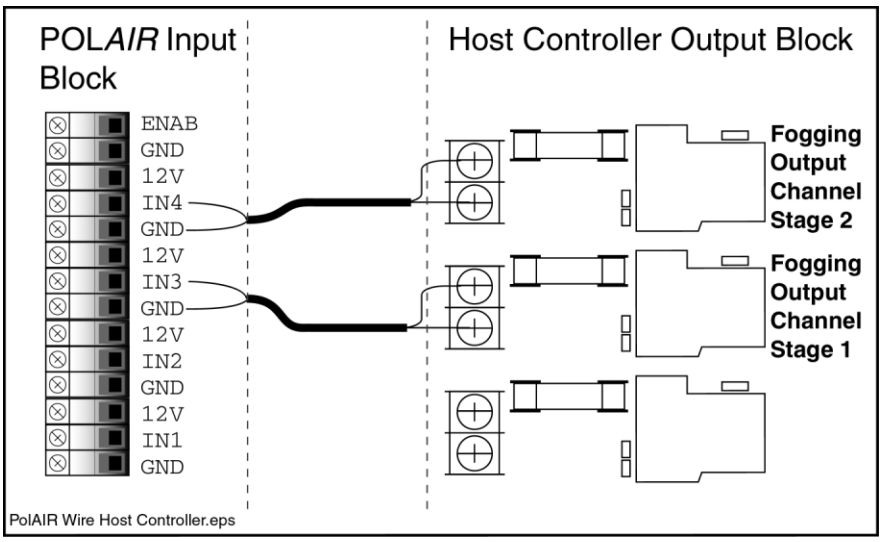

If your controller outputs voltage, then use an intermediary relay to change the voltage to an on/off circuit.

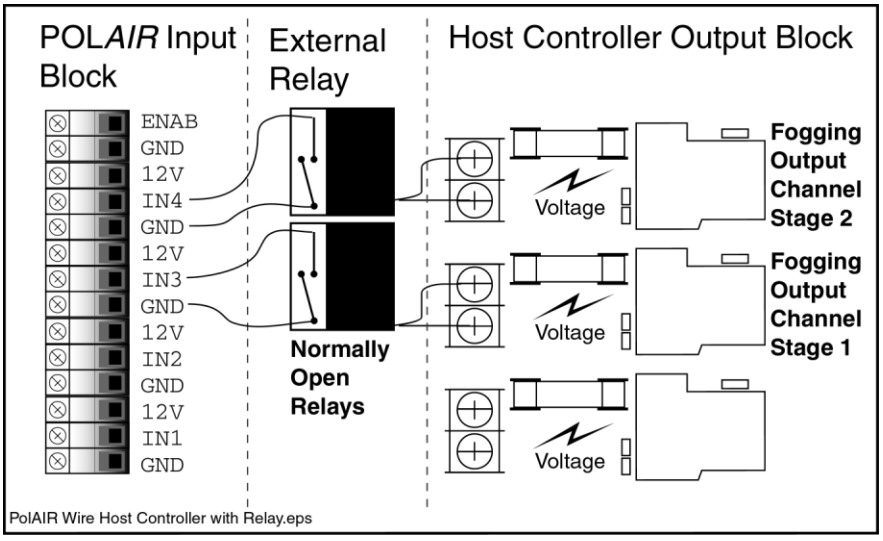

Jumpers

INputs 3 and 4 require a jumper setup on the main board. If INputs 3 and/or 4 are assigned to a humidity sensor, JP1 and JP2 should jumper the upper pins of the jumpers (default). If INputs 3 and 4 are connected to the host control, JP1 and JP2 should jumper the bottom pins.

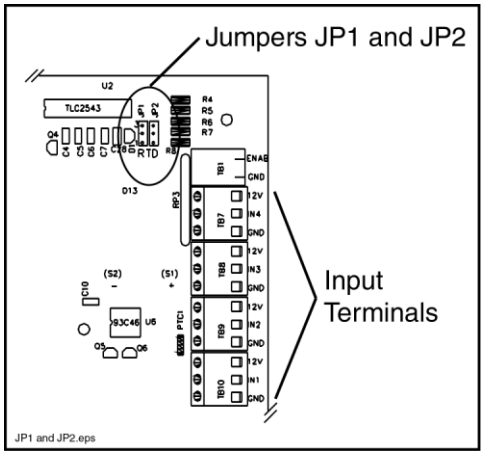

Output Channels

Channel 1 – Inlet

The inlet turns on before the pump is started. Low pressure water is allowed to pressurize the system and an injector may also be connected to allow introduction of a chemical into the evaporative cooling system.

Channel 2 – High-Pressure Pump

The pump relay controls the auxiliary contactor, which turns on the high pressure pump.

Channels 3 and 4 — Stages 1 and 2

Stage 1 and 2 relays control the solenoid between the pump and the nozzle lines. Nozzle lines in the same area can be turned on in stages using the two channels. The POL*AIR* can also turn on lines in separate rooms or zones using the two output channels.

The way channels 3 and 4 behave depends on whether you are using the controller with a host controller or as a stand-alone unit.

Host Control	Stand-Alone
Single Zone, Host Control Configuration Channel 3 starts when the host control closes the circuit to INput 3 or when the average temperature rises above the stage 1 ON Temp (if temperature sensors are installed). Channel 4 starts when the host control closes the circuit to INput 4 or when the average temperature rises above the stage 2 ON Temp. The channels stop cycling on and off (see the Operating Cycle section of this manual) only when the host control turns off the signals and the temperature is at or below the OFF Temp.	*Single Zone, Stand-alone Configuration* Channel 3 starts when the average temperature is at or above the stage 1 ON Temp setting. Channel 4 starts when the average temperature is at or above the stage 2 ON Temp setting. If a humidity sensor is installed, you can also set a disable point for evaporative cooling based on humidity and temperature+humidity. The channels turn off when average temperature is at or below the OFF Temp for that stage.
Two Zone, Host Control Configuration Channel 3 starts when the host control closes the circuit to INput 3 or when sensor #1's temperature rises above the stage 1 ON Temp (if temperature sensors are installed). Channel 4 starts when the host control closes the circuit to INput 4 or when sensor #2's temperature rises above the stage 2 ON Temp. A channel stops cycling on and off (see the *Operating Cycle* section of this manual) only when the host control turns off the signals and the temperature is at or below the OFF Temp.	*Two Zone, Stand-alone Configuration* Channel 3 starts when sensor #1's temperature is at or above the stage 1 ON Temp setting. Channel 4 starts when sensor #2's temperature is at or above the stage 2 ON Temp setting. If humidity sensors are installed, you can also set a disable point for evaporative cooling based on humidity and temperature+humidity in each zone. The channels turn off when temperatures are at or below the OFF Temp for that stage.

Output Terminals

Channels 1 through 4 have three terminals – fused, un-fused and common. Channels 5 and 6 have two terminals – fused and common. The fused terminals are rated at 5 amps (protected by a 6.3 amp fuse). If your circuit draws more than five amps you can use the un-fused terminals and an external fuse. The relay contacts are rated 16 amps at 120VAC.

- Channel 1 – Water Inlet
- Channel 2 – Auxiliary contactor to control pump
- Channel 3 – Stage/Zone One
- Channel 4 – Stage/Zone Two
- Channel 5 – Drain Stage/Zone One
- Channel 6 – Drain Stage/Zone Two

24-Volt Solenoids and Other Devices

Solenoids and other 24-volt devices should be connected to the proper output relays. The POL*AIR* has a 24-volt supply to control these devices (40 W maximum output). Connect one wire from the solenoid to the fused output from the correct channel and the other wire to the 24VAC output from the POL*AIR*. Connect the COM connection on the output channel to the other 24VAC output.

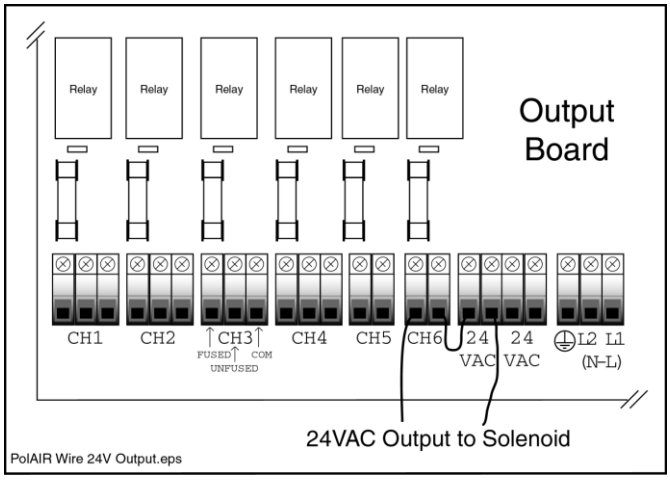

Wiring of 3 Phase Motor and Solenoids with 2 Stages / Zones

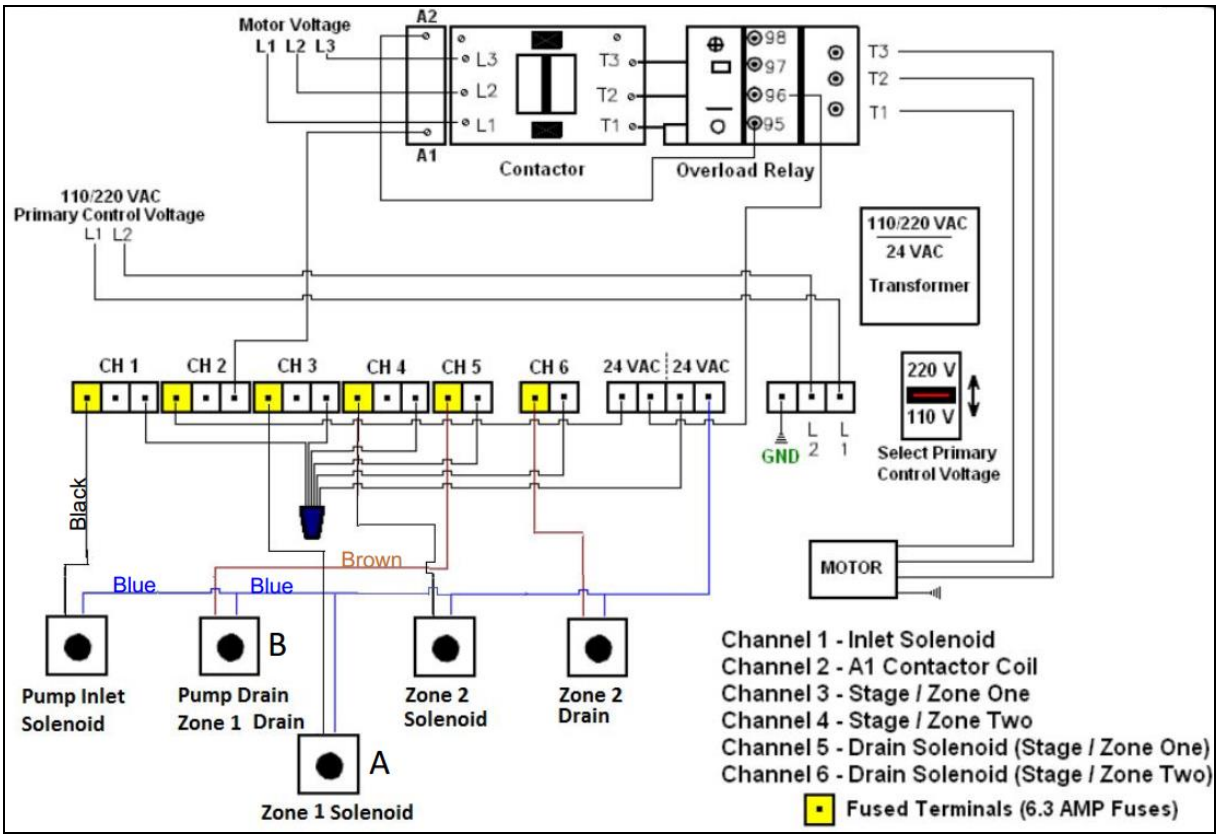

Wiring of Motorized Zone Valve

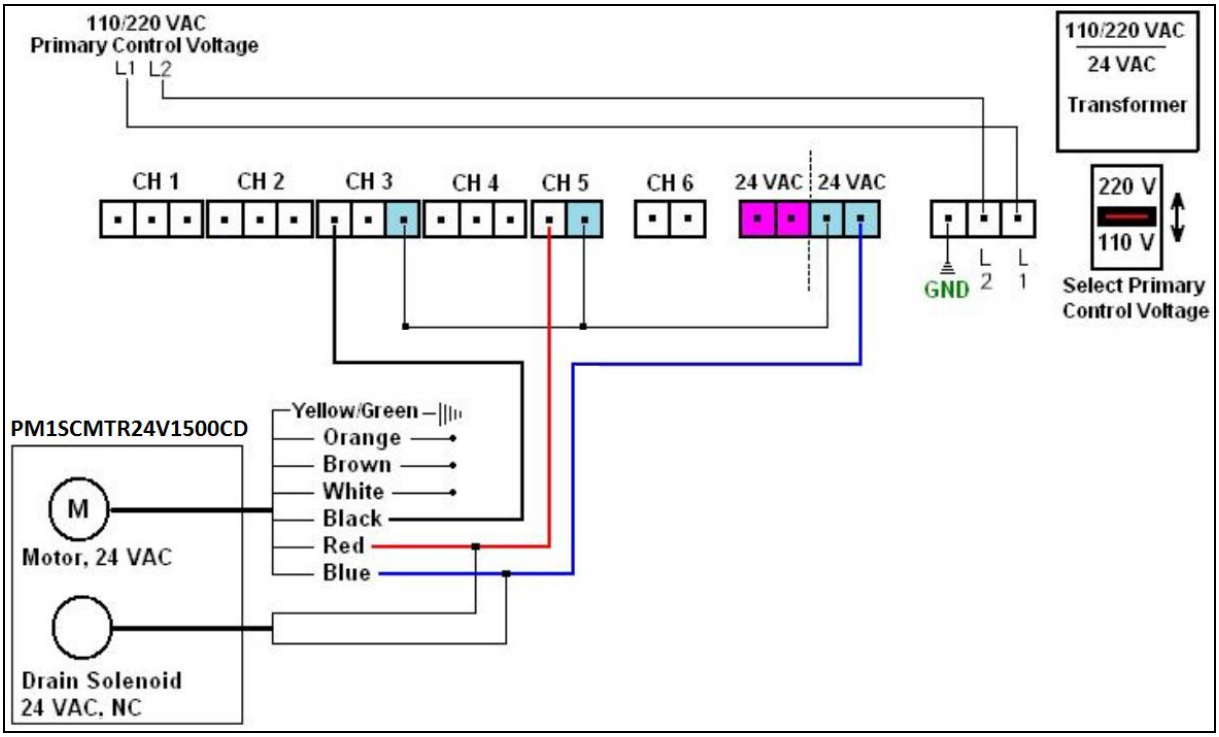

Wiring of 1 Phase Motor and Solenoids with 2 Stages / Zones

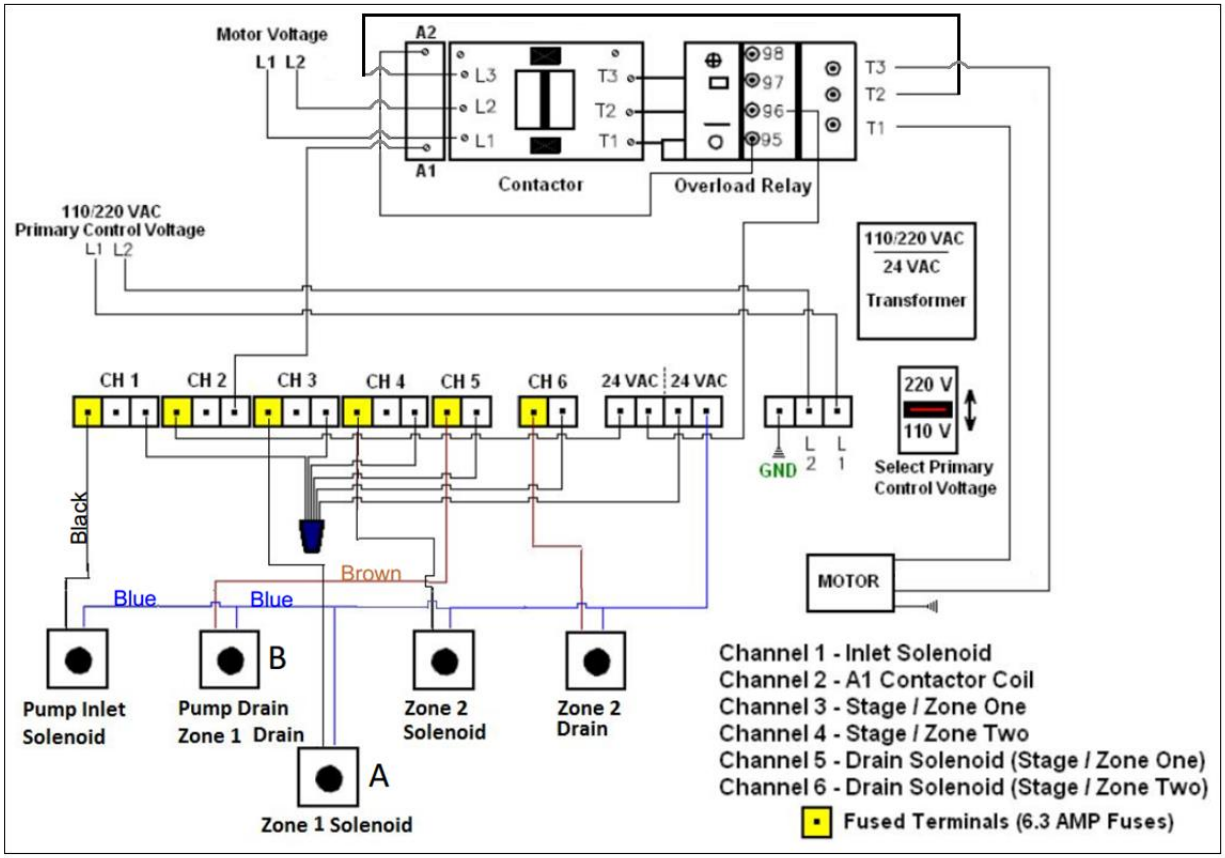

Using the Contactor

A contactor is mounted inside the 23 and 43 amp POL*AIR* models. The contactor is in a separate enclosure for the 60 amp POL*AIR* model. The 23 and 43 amp models already contain wiring from the channel 2 output to the contactor. You will need to complete the wiring for the 60 amp model since the contactor is in a separate enclosure.

1. Connect the POL*AIR* channel 2 fused terminal to one of the POL*AIR* 24 VAC terminals.
2. Connect the POL*AIR* channel 2 common terminal to the auxiliary contactor A1 terminal.
3. Connect another POL*AIR* 24 VAC terminal to the overload relay normally closed (N.C.) terminal 96.
4. Connect the overload relay terminal 95 to the contactor terminal A2
5. Verify the trip setting on the overload relay is on the lowest setting. Adjust to the proper setting when the pump is operated. To adjust the trip setting, turn the dial until the desired operating current is aligned with the pointer. ***The trip rating is 120% of the dial setting***.

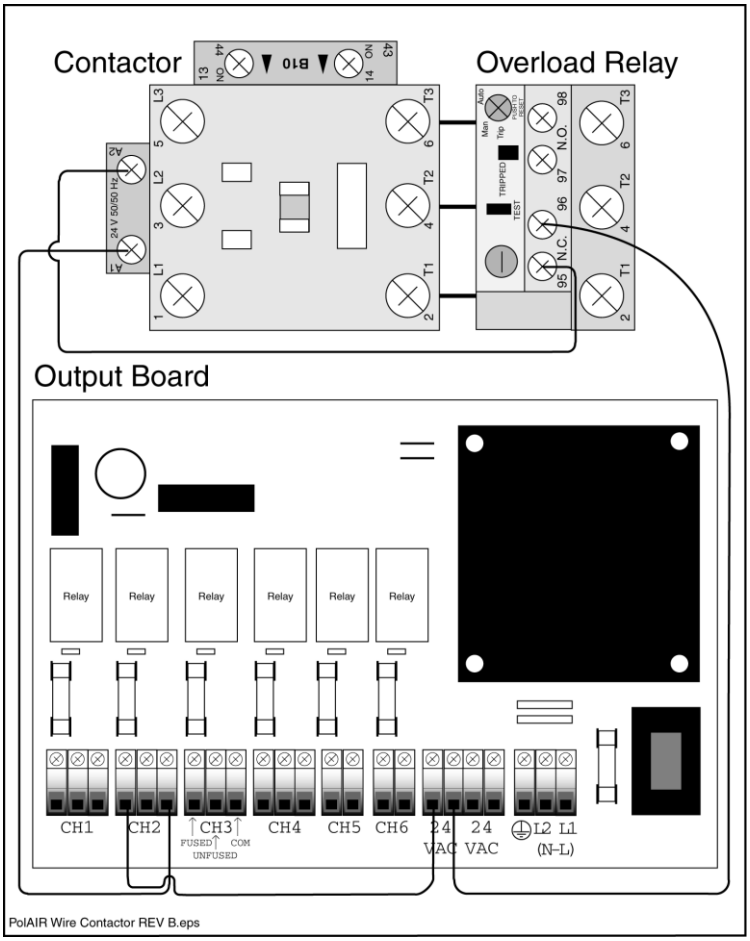

Tripped Condition

If there is a yellow indicator visible in the overload relay's TRIPPED window, it needs to be reset. To reset the overload relay, press in the blue *PUSH TO RESET* button.

Automatic Reset

To enable the automatic reset feature of the overload relay, turn the blue *PUSH TO RESET* button on the right side of the overload relay to the "**Auto**" setting. The overload relay will automatically reset approximately 2 minutes after tripping.



Do not use the automatic reset mode in applications where unexpected automatic restart of the motor can cause injury to people or damage to equipment.

Attaching a Device

To wire a device using this contactor, route the supply wiring from the circuit breaker or service entry panel for this device into the POL*AIR* enclosure, and up to the contactor. Connect the hot and neutral wires supplying the pump or device to contactor connections L1 through L3. Label the wires to make sure you don't confuse them. Connect the wires going to the equipment to overload relay terminals T1 though T3.



Do not route equipment grounding wire through a relay!

Dosing Pump

If the evaporative cooling system is connected to a dosing pump to introduce antibiotics, antiseptics, or any other chemical, the dosing pump can be switched through the contactor's auxiliary contact (terminals 13 and 14). This will run the dosing pump whenever the evaporative cooling system is running.

Operation

Operating Cycle

The POL*AIR* receives a signal to turn on from either the host controller or, when temperature sensors are connected to the POL*AIR*, from its own ON Temp settings. The following operating cycle is used:

- The POL*AIR* turns on the water input (channel 1).
- After the Pump Delay Time, the POL*AIR* checks the low-pressure sensor to verify that there is enough water pressure at the pump. If there is, channel 2 turns on (closes the contactor) which controls the pump. At the same time, channel 3 and/or 4 turns on, depending on which line(s) will be fogging. The pump runs for the channel 3 or 4 ON Time then shuts off.
- If the input pressure is low, the POL*AIR* waits until the Low Pressure Delay Time is complete and then tries to restart. It will continue this cycle until the input pressure rises and it is safe to turn the pump on.
- When stage 1 and/or stage 2 turn off (channels 3 and 4), channel 5 (stage 1 drain) and/or channel 6 (stage 2 drain) depressurize the lines, draining sediment and preventing water from squirting out the nozzles onto the floor.
- The cycle begins again after the channel 3 or 4 OFF Time is complete.

The following can disable evaporative cooling:

1. Input pressure is too low.
2. Humidity is above the Humidity Disable setting (stand-alone mode).
3. Stress Index is above the Temp+Humidity setting (stand-alone mode).
4. Temperature drops to or below the OFF Temp (stand-alone mode).
5. Off signal is received from the host control (host control mode) and the temperature (if a temp sensor is installed) is below the ON Temp.
6. Toggle switches on the front of the POL*AIR* are turned OFF.

Operating Modes

Select an Operating Mode

The POL*AIR* functions in four different modes:

- Single zone, controlled by a host controller.
- Two zone, controlled by a host controller.
- Single zone, stand-alone control.
- Two zone, stand-alone control.

Configuring the Control

Mode Settings

The control must be set up to operate in the mode you want to use. To do this, open the front cover and set DIP switches S7 for the following settings:

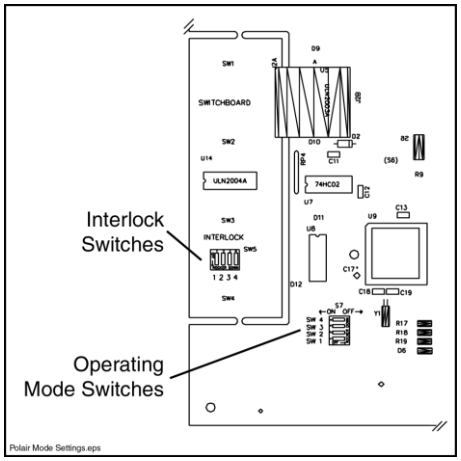

Temperature

- Switch 4 should be ON for Celsius operation (metric calibration measurements) and OFF for Fahrenheit operation (American calibration measurements).
- For metric operation, wire length must be entered in meters and wire gauge in AWG.

Control Mode

- Switch 1 should be ON for stand-alone mode and OFF for host control mode.

Zone Mode

- Switch 2 should be ON for two zone operation and OFF for single zone operation.

Interlock Settings

The DIP switches marked INTERLOCK should all be ON which is the default position. The OFF position is only used in non-standard applications.



*A **FLASHING** display indicates an invalid temperature or humidity reading, or a low pressure status on the input.*

Programming the Controller

After you have set up the POL*AIR* for the proper operating mode using the DIP switches and you have properly wired the control, it can be programmed.

To program the values:

1. Press the function selection Up or Down arrow key to select the function to be programmed.
2. Press the + or – value keys until the display reads the value you wish to enter.
3. Press the ENTER key to confirm your change.
4. (Press CANCEL if you decide not to change the setting).
5. Move to the next function by pressing the Up or Down arrow key.

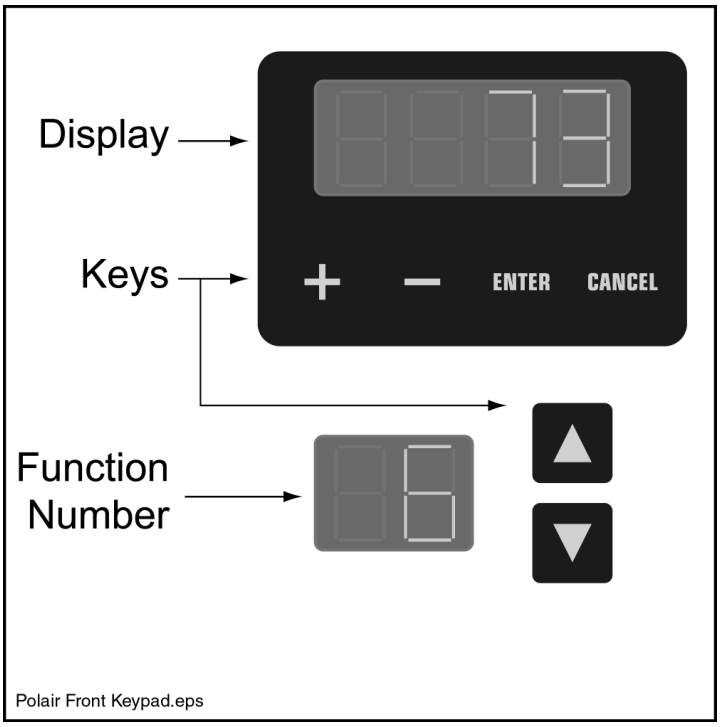

Note: The ON Temps must be higher than the OFF Temps. If your temperature does not stay when you push ENTER, you entered an ON Temp equal to or lower than the OFF Temp.

First Time Setup Functions

(Skip this section if no sensors are attached to the POL*AIR*)

When the POL*AIR* control unit is programmed the first time, you must calibrate any sensors attached to the unit. To display the setup functions, press and hold down the + *and* the Up arrow keys at the same time until Function 80 appears. Release the Up arrow key first. Now you can move between functions with the Up and Down arrow keys.

To return to the operating menu, push the Down arrow until the display starts with function 1 again. After one minute, the POL*AIR* will automatically return to function 1.

Function 80: Sensor 1 Wire Length.

1. Press the + or – keys until the correct length of the wire (0 to1000 feet or 0 to 304 meters) is displayed. In metric setup, enter meters. DIP switch 4 must be ON for metric use.
2. Press ENTER.
3. Press the Down arrow to move to Function 81.

Verify the temperature reading with an accurate thermometer. Add more wire length to the Function 80 setting if sensor #1 reads too high.

Function 81: Sensor 1 Wire Gauge (18, 20, 22, or 24 AWG only).

Programming is the same process as for Function 80. Enter the correct gauge.

AWG EQUIVALENT FOR METRIC WIRE GAUGE

AWG	mm diameter	mm area
24	.51	.21
22	.64	.32
20	.81	.52
18	1.02	.82

Function 82: Sensor 2 Wire Length.

Programming is the same process as for Function 80. Enter the correct length.

Verify the temperature reading with an accurate thermometer. Add more wire length to the Function 82 setting if sensor #2 reads too high.

Function 83: Sensor 2 Wire Gauge (AWG only).

Programming is the same process as for Function 80. Enter the correct wire gauge.

Function 84: Humidity sensor #1 CAL1 (only used if a humidity sensor is installed). Use the calibration value #1 on the sensor's tag divided by 16 (thus, 10485 becomes 655). Use the POL*AIR*'s default values if no tag is present.

Function 85: Humidity sensor #1 CAL2 (only used if a humidity sensor is installed). Use the calibration value #2 on the sensor's tag divided by 16 (thus, 51120 becomes 3195). Use the POL*AIR*'s default values if no tag is present.

Function 86: Humidity sensor #2 CAL1 (only used if a second humidity sensor is installed). Use the calibration value #1 on the sensor's tag divided by 16 (thus, 10485 becomes 655). Use the POL*AIR*'s default values if no tag is present.

Function 87: Humidity sensor #2 CAL2 (only used if a second humidity sensor is installed). Use the calibration value #2 on the sensor's tag divided by 16 (thus, 51120 becomes 3195). Use the POL*AIR*'s default values if no tag is present.

After the initial setup, settings for functions 80 through 87 should not be changed unless:

- The wire length or gauge is in error.
- Temperature sensor wires are changed.
- Sensors are added.

Function Selections for Single Zone, Host Control Mode

Be sure the proper sticker showing functions for the proper operating mode is applied to the front of the control. Each operating mode has different function menus.

Function 1 – Average Sensor Temp

Displays average of all temperature sensors connected to the POL*AIR*.

Function 2 & 3 – Stage 1 / Stage 2 Sensor Temp

Displays sensor #1 and sensor #2 temperatures.

Function 4 & 5 – Stage 1 / Stage 2 Host Control Status

Displays the status of the signal from the host control as ON or OFF.

Function 6 – Low Pressure Status

Displays the status of the low pressure sensor as Hi (high) or Lo (low). A Lo condition means that water is not being supplied to the pump.

Function 7 & 8 – Stage 1 ON/OFF Temp

Sets and displays the ON and OFF Temps for stage 1. The average reading of all installed temperature sensors is used to control stage 1. The ON Temp cannot be set at or below the OFF Temp. An ON signal from the controller always has precedence over the ON Temp setting.

Function 9 & 10 – Stage 2 ON/OFF Temp

Sets and displays the ON and OFF Temps for stage 2. The average reading of all installed temperature sensors is used to control stage 2. The ON Temp cannot be set at or below the OFF Temp. An ON signal from the controller always has precedence over the ON Temp setting.

Function 11 & 12 – Stage 1 ON/OFF Time Cycle

Sets and displays the time for cycling stage 1 on and off once the ON Temp has been reached. To run continuously above the ON Temp, set the OFF Time to 0 and the ON Time to one or more seconds.

Function 13 & 14 – Stage 2 ON/OFF Time Cycle

Sets and displays the time for cycling stage 2 on and off once the ON Temp has been reached.

Function 15 – Pump Delay Time

Sets and displays the time between water inlet open and pump start. This should be at least 5 seconds.

Function 16 – Drain Time

Sets and displays seconds of drain time to release pressure from lines after the pump cycle. This is typically set to at least 60 seconds.

Function 17 – Low Pressure Delay Time

Sets and displays the time between a low pressure failure and the next attempt to start the pump.

A low pressure failure occurs when the input pressure status is Lo (low) and the POL*AIR* tries to start the high pressure pump. To prevent the pump from burning out, the POL*AIR* will not turn it on. After the low pressure delay time, the POL*AIR* will attempt another start. The cycle continues until the input pressure status is Hi (high).

Function Selections for Two Zone, Host Control Mode

Function 1 & 2 – Stage 1 / Stage 2 Sensor Temp

Displays sensor #1 and sensor #2 temperatures.

Function 3 & 4 – Stage 1 / Stage 2 Host Control Status

Displays the status of the signal from host control as ON or OFF.

Function 5 – Low Pressure Status

Displays the status of the low pressure sensor as Hi (high) or Lo (low). A Lo condition means that water is not being supplied to the pump.

Function 6 & 7 – Stage 1 ON/OFF Temp

Sets and displays the ON and OFF Temps for stage 1. Sensor #1's temperature reading is used to control stage 1. The ON Temp cannot be set at or below the OFF Temp. An ON signal from the controller always has precedence over the ON Temp setting.

Function 8 & 9 – Stage 2 ON/OFF Temp

Sets and displays the ON and OFF Temps for stage 2. Sensor #2's temperature reading is used to control stage 2. The ON Temp cannot be set at or below the OFF Temp. An ON signal from the controller always has precedence over the ON Temp setting.

Function 10 & 11 – Stage 1 ON/OFF Time Cycle

Sets and displays the time for cycling stage 1 on and off once the ON Temp has been reached. To run continuously above the ON Temp, set the OFF Time to 0 and the ON Time to one or more seconds.

Function 12 & 13 – Stage 2 ON/OFF Time Cycle

Sets and displays the time for cycling stage 2 on and off once the ON Temp has been reached.

Function 14 – Pump Delay Time

Sets and displays the time between water inlet open and pump start. This should be at least 5 seconds.

Function 15 – Drain Time

Sets and displays seconds of drain time to release pressure from lines after the pump cycle. This is typically set to at least 60 seconds.

Function 16 – Low Pressure Delay Time

Sets and displays the time between a low pressure failure and the next attempt to start the pump.

A low pressure failure occurs when the input pressure status is Lo (low) and the POL*AIR* tries to start the high pressure pump. To prevent the pump from burning out, the POL*AIR* will not turn it on. After the low pressure delay time, the POL*AIR* will attempt another start. The cycle continues until the input pressure status is Hi (high).

Function Selections for Single Zone, Stand-alone Mode

Function 1 – Average Sensor Temp

Displays the average of all temperature sensors connected to the POL*AIR*.

Function 2 & 3 – Stage 1 / Stage 2 Sensor Temp

Displays sensor #1 and sensor #2 temperature.

Function 4 – Current Humidity

Displays the reading from the humidity sensor (only one humidity sensor can be used in single zone, stand-alone mode).

Function 5 – Low Pressure Status

Displays the status of the low pressure sensor as Hi (high) or Lo (low). A Lo condition means that water is not being supplied to the pump.

Function 6 & 7 – Stage 1 ON/OFF Temp

Sets and displays ON and OFF Temp for stage 1. The ON Temp cannot be set at or below the OFF Temp. The average reading of all installed temperature sensors is used to control stage 1.

Function 8 & 9 – Stage 2 ON/OFF Temp

Sets and displays the ON and OFF Temps for stage 2. The ON Temp cannot be set at or below the OFF Temp. The average reading of all installed temperature sensors is used to control stage 2.

Function 10 & 11 – Stage 1 ON/OFF Time Cycle

Sets and displays the time for cycling stage 1 on and off once the ON Temp has been reached. To run continuously above the ON Temp, set the OFF Time to 0 and the ON Time to one or more seconds.

Function 12 & 13 – Stage 2 ON/OFF Time Cycle

Sets and displays the time for cycling stage 2 on and off once the ON Temp has been reached. To run continuously above the ON Temp, set the OFF Time to 0 and ON Time to one or more seconds.

Function 14 – Pump Delay Time

Sets and displays the time between water inlet open and pump start. This should be at least 5 seconds.

Function 15 – Drain Time

Sets and displays seconds of drain time to release pressure from lines after the pump cycle. This is typically set to at least 60 seconds.

Function 16 – Low Pressure Delay Time

Sets and displays time allowed between a low pressure failure and the next attempt to start the pump.

A low pressure failure occurs when the input pressure status is Lo (low) and the POL*AIR* tries to start the high pressure pump. To prevent the pump from burning out, the POL*AIR* will not turn it on. After the low pressure delay time, the POL*AIR* will attempt another start. The cycle continues until the input pressure status is Hi (high).

Function 17 & 18 – Stage 1 Humidity Disable/Enable

Sets and displays the humidity cutoff and resume for stage 1. Set the percentage of relative humidity at which evaporative cooling will stop and the percentage at which to resume evaporative cooling. The humidity limit prevents the POL*AIR* from wetting animals by over fogging in high humidity. Evaporative cooling is very limited in its cooling effect above 85% humidity.

Set Humidity Disable to 100 percent if you do not want to use this feature.

Function 19 & 20 – Stage 2 Humidity Disable/Enable

Sets and displays humidity cutoff and resume for stage 2. Set Humidity Disable to 100 percent if you do not want to use this feature.

Function 21 & 22 – Stage 1 Temp+Humidity Disable/Enable

Sets and displays temperature (Fahrenheit) plus relative humidity (percent) cutoff for stage 1. Set the stress index at which evaporative cooling will stop and the stress index at which to resume evaporative cooling. Refer to the *Stress Index* section in this manual for more information.

Set Temp+Humidity Disable to 200 if you do not want to use this feature.

Function 23 & 24 – Stage 2 Temp+Humidity Disable/Enable

Sets and displays temperature (Fahrenheit) plus relative humidity (percent) cutoff for stage 2. Set Temp+Humidity Disable to 200 if you do not want to use this feature.

Function Selections for Two Zone, Stand-alone Mode

Function 1 & 2 – Stage 1 / Stage 2 Sensor Temp

Displays sensor #1 and sensor #2 temperature.

Function 3 & 4 – Stage 1 / Stage 2 Humidity

Displays the readings from the stage 1 and stage 2 humidity sensors.

Function 5 – Low Pressure Status

Displays the status of the low pressure sensor as Hi (high) or Lo (low). A Lo condition means that water is not being supplied to the pump.

Function 6 & 7 – Stage 1 ON/OFF Temp

Sets and displays the ON and OFF Temps for stage 1. The ON Temp cannot be set at or below the OFF Temp.

Function 8 & 9 – Stage 2 ON/OFF Temp

Sets and displays the ON and OFF Temps for stage 2. The ON Temp cannot be set at or below OFF Temp.

Function 10 & 11 – Stage 1 ON/OFF Time Cycle

Sets and displays the time for cycling stage 1 on and off once the ON Temp has been reached. To run continuously above the ON Temp, set the OFF Time to 0 and the ON Time to one or more seconds.

Function 12 & 13 – Stage 2 ON/OFF Time Cycle

Sets and displays the time for cycling stage 2 on and off once the ON Temp has been reached. To run continuously above the ON Temp, set the OFF Time to 0 and ON Time to one or more seconds.

Function 14 – Pump Delay Time

Sets and displays the time between water inlet open and pump start. This should be at least 5 seconds.

Function 15 – Drain Time

Sets and displays seconds of drain time to release pressure from lines after pump cycle. This is typically set to at least 60 seconds.

Function 16 – Low Pressure Delay Time

Sets and displays time allowed between a low pressure failure and the next attempt to start the pump.

A low pressure failure occurs when the input pressure status is Lo (low) and the POL*AIR* tries to start the high pressure pump. To prevent the pump from burning out, the POL*AIR* will not turn it on. After the low pressure delay time, the POL*AIR* will attempt another start. The cycle continues until the input pressure status is Hi (high).

Function 17 & 18 – Stage 1 Humidity Disable/Enable

Sets and displays the humidity cutoff and resume for stage 1. Set the percentage of relative humidity at which evaporative cooling will stop and the percentage at which to resume evaporative cooling. The humidity limit prevents the POL*AIR* from wetting animals by over fogging in high humidity. Fogging is very limited in its cooling effect above 85% humidity.

Set Humidity Disable to 100 percent if you do not want to use this feature.

Function 19 & 20 – Stage 2 Humidity Disable/Enable

Sets and displays humidity cutoff and resume for stage 2. Set Humidity Disable to 100 percent if you do not want to use this feature.

Function 21 & 22 – Stage 1 Temp+Humidity Disable/Enable

Sets and displays temperature (Fahrenheit) plus relative humidity (percent) cutoff for stage 1. Set the stress index at which evaporative cooling will stop and the stress index at which to resume evaporative cooling. Refer to the *Stress Index* section in this manual for more information.

Set Temp+Humidity Disable to 200 if you do not want to use this feature.

Function 23 & 24 – Stage 2 Temp+Humidity Disable/Enable

Sets and displays temperature (Fahrenheit) plus relative humidity (percent) cutoff for stage 2. Set Temp+Humidity Disable to 200 if you do not want to use this feature.

Stress Index

Either high temperature or high humidity can stress animals, but a combination of high temperature *and* high humidity is very stressful and often deadly. Tunnel houses have a critical lethal temperature plus humidity index of about 180. Non-tunnel houses will reach a lethal stress index at about 160. This varies with the type of animal and the age. **Consult experts to find out the appropriate stress index for your application.**

The following chart illustrates how different combinations of temperature and humidity could produce a stress index of 175.

Degrees Fahrenheit	+ Relative Humidity	= Stress Index
75	100	175
80	95	175
85	90	175
90	85	175
95	80	175
100	75	175
105	70	175
110	65	175

Use the conversion chart that follows to find your stress index using degrees Celsius and relative humidity.

Note: Since the Temperature+Humity (stress index) values always use Fahrenheit degrees, this value does not change if you switch the POL*AIR* from Fahrenheit to Metric units of measure.

Find your temperature in Celsius in the left-hand column, and then find the desired relative humidity percentage at the top of the column. The box at the intersection of the row and column gives you the proper stress index based on the Celsius temperature and humidity you have chosen.

Stress Index Conversion for Centigrade

	Relative Humidity—Percentage													
Degrees Celsius	**100**	**95**	**90**	**85**	**80**	**75**	**70**	**65**	**60**	**55**	**50**	**45**	**40**	**35**
20	168	163	158	153	148	143	138	133	128	123	118	113	108	103
21	170	165	160	155	150	145	140	135	130	125	120	115	110	105
22	172	167	162	157	152	147	142	137	132	127	122	117	112	107
23	173	168	163	158	153	148	143	138	133	128	123	118	113	108
24	175	170	165	160	155	150	145	140	135	130	125	120	115	110
25	177	172	167	162	157	152	147	142	137	132	127	122	117	112
26	179	174	169	164	159	154	149	144	139	134	129	124	119	114
27	181	176	171	166	161	156	151	146	141	136	131	126	121	116
28	182	177	172	167	162	157	152	147	142	137	132	127	122	117
29	184	179	174	169	164	159	154	149	144	139	134	129	124	119
30	186	181	176	171	166	161	156	151	146	141	136	131	126	121
31	188	183	178	173	168	163	158	153	148	143	138	133	128	123
32	190	185	180	175	170	165	160	155	150	145	140	135	130	125
33	191	186	181	176	171	166	161	156	151	146	141	136	131	126
34	193	188	183	178	173	168	163	158	153	148	143	138	133	128
35	195	190	185	180	175	170	165	160	155	150	145	140	135	130
36	197	192	187	182	177	172	167	162	157	152	147	142	137	132
37	199	194	189	184	179	174	169	164	159	154	149	144	139	134
38	200	195	190	185	180	175	170	165	160	155	150	145	140	135
39	202	197	192	187	182	177	172	167	162	157	152	147	142	137
40	204	199	194	189	184	179	174	169	164	159	154	149	144	139

Troubleshooting

A channel is not working.

Is the switch on auto? If it works when the control is set to manual on, then the function settings are probably set incorrectly.

Is the light coming on without turning the output on? Check the fuse for that channel. Check the circuit breaker for that device. If the device runs off the 24V output, is the circuit wired correctly?

Channels 1 and 2 / Channels 3 and 4 will not turn on at the same time when they are supposed to.

The Interlock switches on the back of the switch circuit board must all be turned ON (up) to allow each channel to operate independently.

The POL*AIR* is not responding to the host control.

The host control input must come from a normally open relay. When the relay is closed, the POL*AIR* will start a fogging cycle.

Inputs from the host control for stage 1 and 2 must be connected to INputs 3 and 4. Jumpers JP1 and JP2 must be set properly. See the *Jumpers* section of this manual.

The DIP switches are set for one mode but the control is doing another.

You must disconnect power from the control and re-apply power before the changes become effective.

The temperature reading for one of the sensors shows only straight lines.

The sensor is broken or not connected.

I tried to input a temperature for on/off into the control but the temperature would not change.

Are you trying to enter an ON temp lower than your OFF temp? Are you trying to enter an OFF temp higher than your ON temp? If so, change the other setting first.

Did you press ENTER after changing the temperature?

A channel will not operate based on high and low temperatures only.

You must enter an ON Time of at least 1 second. You can leave the OFF Time at zero.

Specifications

Main Power Input

120VAC/240VAC, 1.0A max.

24V Output

40 Watts (Contactor and up to 3 external solenoids)

Output Relays

120VAC, ½ HP; 240VAC, 1 HP

Fused: 5A, 120/240 VAC maximum GP

Unfused: 10A, 120/240 VAC maximum GP

120VAC, 5A; tungsten rating

Contactor

Input: 24 VAC coil voltage

Output: 23, 43, 60 Amp (depending on model)

Fuses

Input Power – 1.0 Amp / 250VAC (5x20mm) slow-acting fuse (Littelfuse® 218 001 or equivalent).

Output Relay – 6.3 Amps / 250VAC ceramic (5x20mm) fast-acting fuse (Littelfuse® 216 06.3 or equivalent).

Hardware Settings

DIP Switches

Mode Setting.....See page 21

Metric.....See page 21

Interlock.....See page 21

Jumpers for Inputs 3 & 4

Host Control..... See page 15

Humidity Sensor ..... See page 15

Parts Diagram

POL*AIR* 400 HC 23 Amp Model

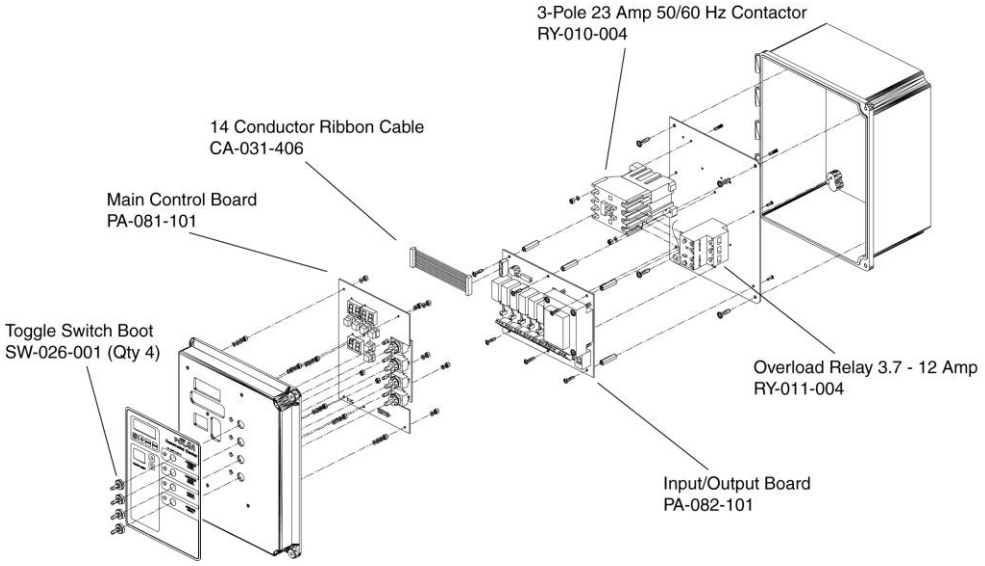

POL*AIR* 400 HC 43 Amp Model

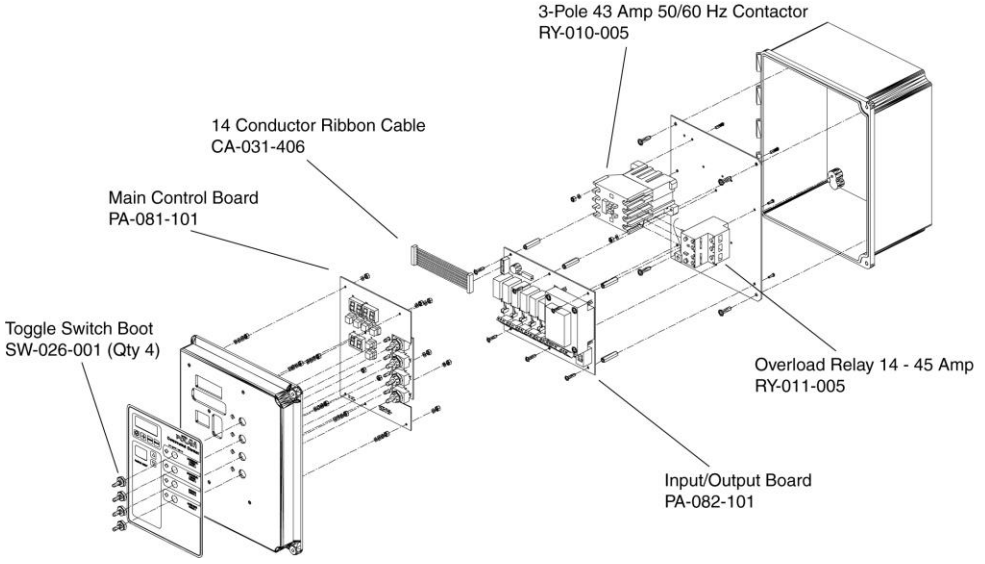

POL*AIR* 400 HC 60 Amp Model

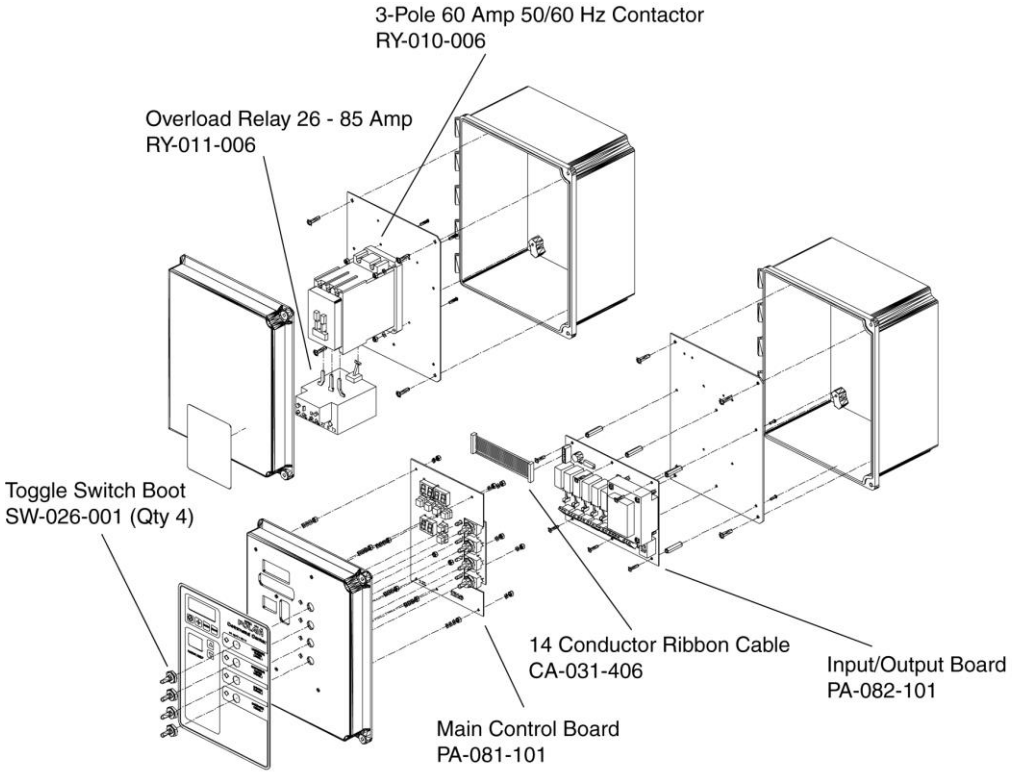

Customer Service

Dealer Name:_____**PHONE:**_____

Street / PO Box _____

City _____

State / Province _____

Zip / Postal _____

Phone _____

Fax _____

E-mail _____

Web site _____

Customer Service
210 E. Main Street
P. O. Box 117
Coldwater, OH 45828
800.998.2526

North America:
Phone: 800.99VALCO (800.998.2526)
Fax: 419.678.2200
Email: sales@Val-co.com

International:
Phone: (+1) 419.678.8731
Fax: (+1) 419.678.2200
Email: intl.sales@Val-co.com