Quick Sheet Instructions (990139)

FUZE CONTROL PAN W/PROXIMITY SENSOR
451800, 451805, 455919, 455920, 455921, 455922, 455923, 455924

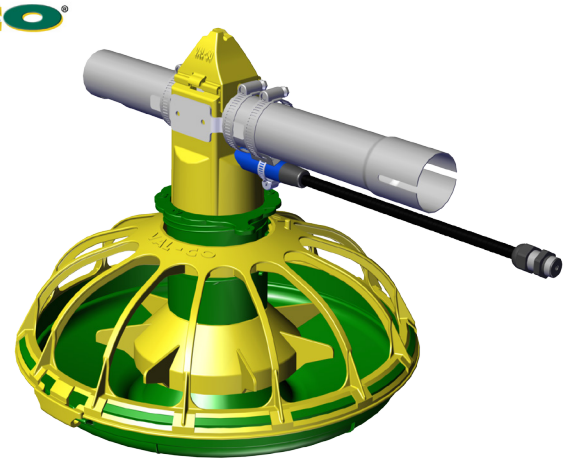

Sensor Specifications
Voltage: 20-280VAC/VDC
Frequency: 47-63 Hz
Time delay (adjustable): 1-60 sec.

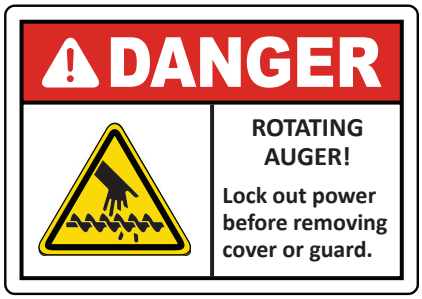

OVERVIEW

The control pan is typically used at the END-OF-LINE feeder tube applications, as shown in Figure 1. It may also be used in MID-LINE installations.

Figure 1

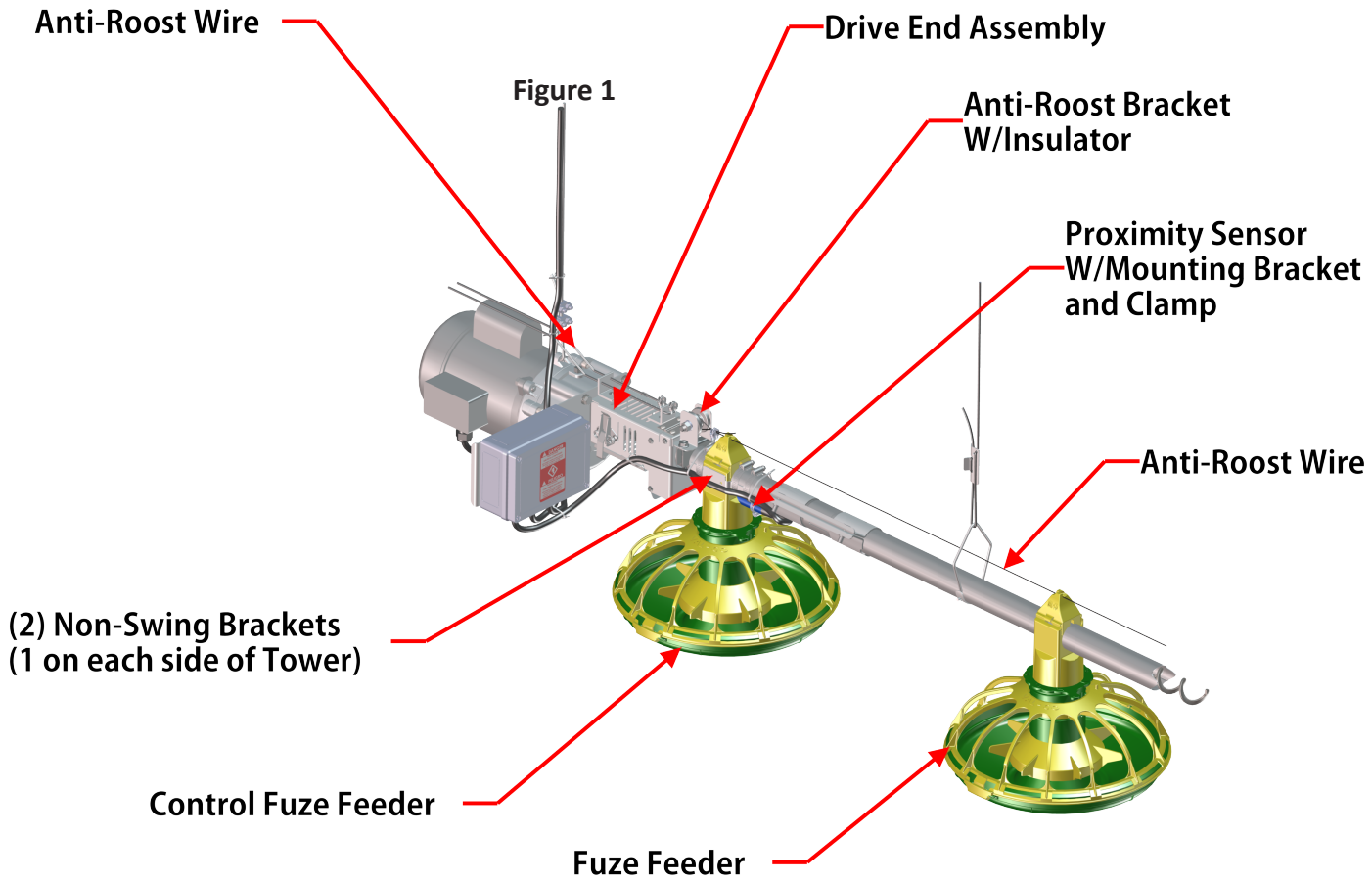

Do not route wires from motor and control switch that are attached to ceiling under sheet metal plate. They can get tangled and cut during winching.

Installation Instructions

1. Remove the FE1550 Feeder Tower Cap from assembly by sliding it off *(if pre-assembled) the Control Pan.*
2. Lift the Control Pan onto the bottom of the Port Tube centered under the Feed Drop Hole. Orient the Proximity Switch mounting hole of Feeder Tower, as shown in Figure 2, on the opposite side of drive unit.
3. Slide the FE1550 Feeder Tower Cap onto the Feeder Tower tabs, as shown in Figure 3.

Figure 2

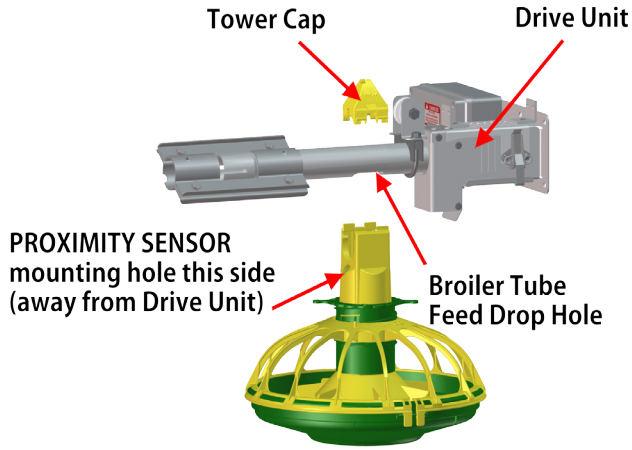

Figure 3

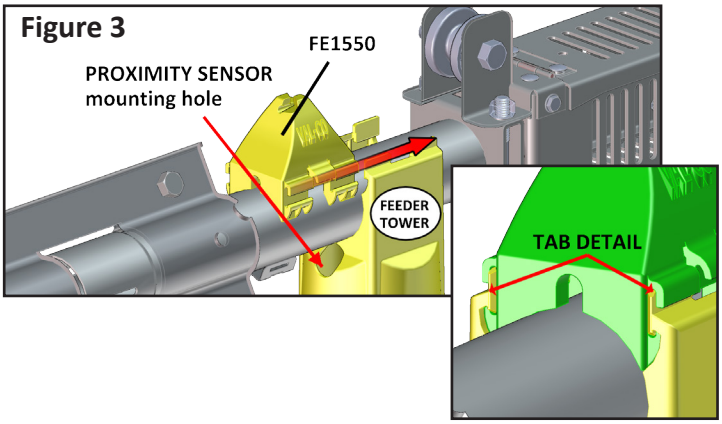

4. Fasten the (2) 451008 Tube Clamps onto the Port Tube, one on each side of the Control Pan, around the two (2) ends of each 820158 Non-Swing Brackets, as shown in Figure 4 and 5.

Figure 4

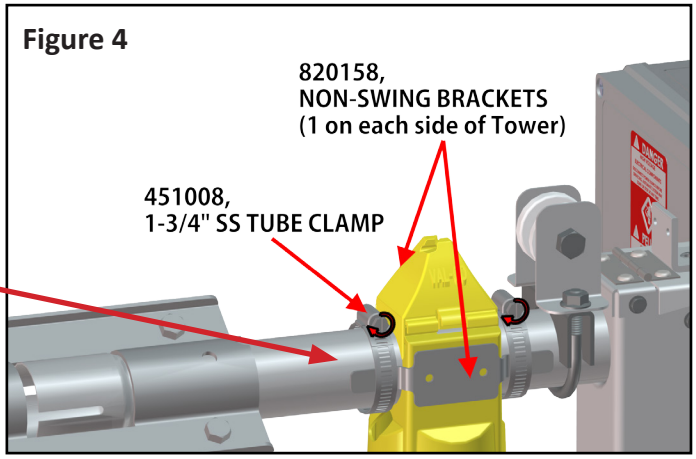

Figure 5

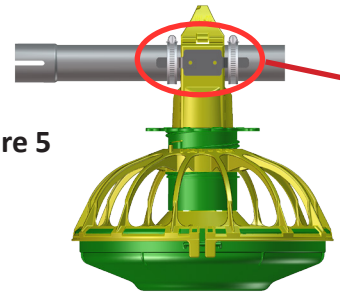

TIGHTEN THE 451008 TUBE CLAMPS OVER THE 820158 NON-SWING BRACKET TABS AND AS CLOSE TO THE CONTROL PAN AS POSSIBLE.

5. Attach the 750437 Proximity Sensor to the 820177 Mounting Bracket using the 455928 Hose Clamp, *leaving 1.06 (1-1/6" or 2.69 cm) of the wiring end of the sensor beyond the bracket,* as shown in Figure 6.
6. Mark the location of the insertion point with a magic marker. Draw a line .50" (1/2" or 12.7mm) from the other end of the sensor, as shown in Figure 6. This will be used to position the sensor into the Feeder Tower.

Figure 6

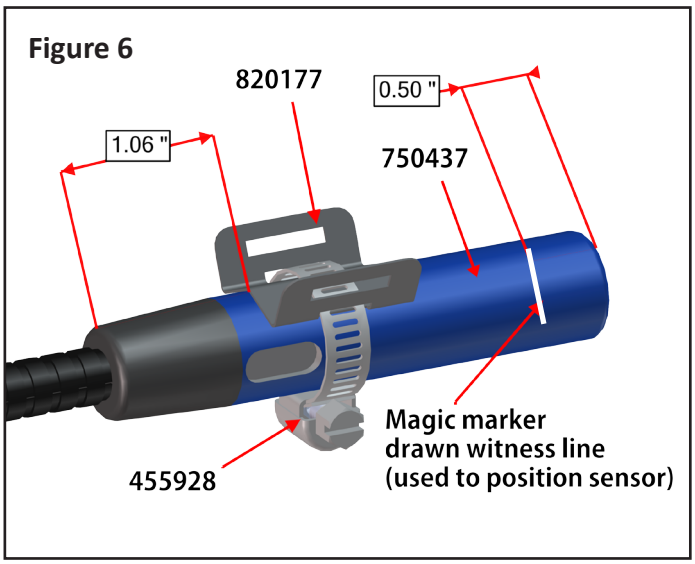

7. Insert the Proximity Sensor into the Feed Tower .50" (1/2" or 12.7mm) up to the marked witness line drawn in Figure 6 on previous page and, as shown in Figure 7 to the right. Attach the Sensor Bracket to the Feed Supply Tube with the 451008 Hose Clamp. Then connect the Sensor Wire to power source, as indicated in the wiring diagrams on page 4.

Figure 7

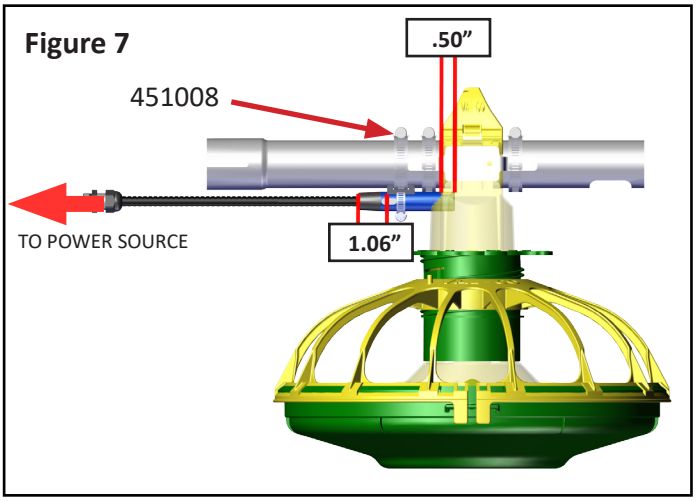

Depending on feed and conditions, feed can sometimes buildup on the proximity sensor and cause early shutoff. To remedy the situation, spray with static guard (available at most stores in the laundry section) before you install the sensor or as necessary. Once dry, reinstall the sensor into the Fuze Tower. Depending on your conditions, you may want to make this a routine maintenance check.

Proximity Sensor Adjustment

8. Use the small screwdriver, included with shipping, to adjust the SENSITIVITY on the sensor CCW until it can no longer be rotated. This will set the proximity to the least sensitive setting. Adjust the DELAY screw CW. This will set the sensor to the longest time delay, as shown in Figure 8.
9. When the feed in running line fills Control Pan Tower and begins to bypass the Control Tower, quickly adjust SENSITIVITY screw CW until feed line motor stops, then turn a fraction more.
10. Vibrate the Control Pan to settle feed, adjust DELAY screw CCW to desired time of delay.
11. Repeat and adjust as necessary until desired setting is achieved. **NOTE**: Off time delay is adjustable from 1-60 seconds. Val-Co® recommends 60 second delay to prevent excessive feed line cycling.

Turn (once) 240 degrees trimmers-e.g. sensitivity and delay - see product label for details.

Figure 8

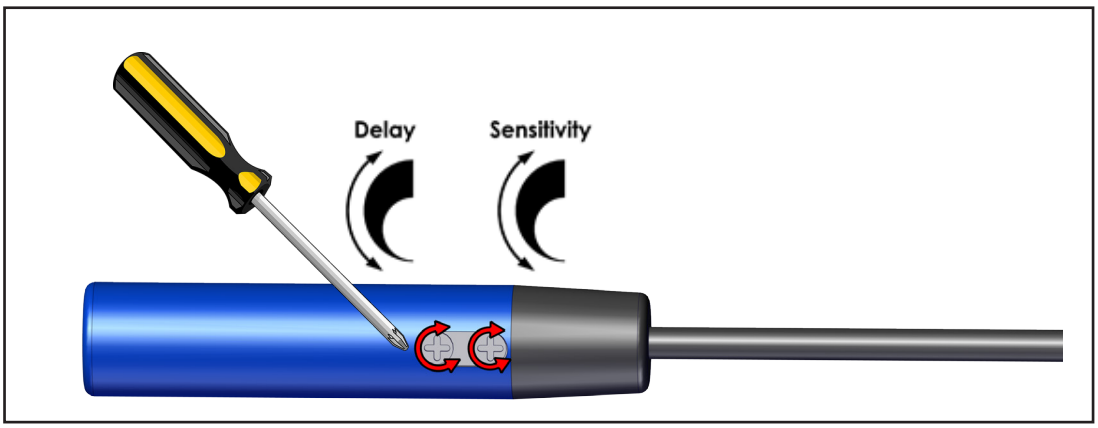

LED Indicaton	Sensor	Status	Feed Line
RED ON	Sensor output is ON	closed	No feed detected, motor ON
RED OFF	Sensor output is OFF	open	Feed detected, motor OFF
RED slow flashing	Sensor delay is active	still open	No feed detected, motor still OFF

Wiring Diagrams

Wiring must be done by a licensed electrician. All local codes must be followed!

Relays/coils must be integrated as shown. Proximity sensor not to directly switch motor load.

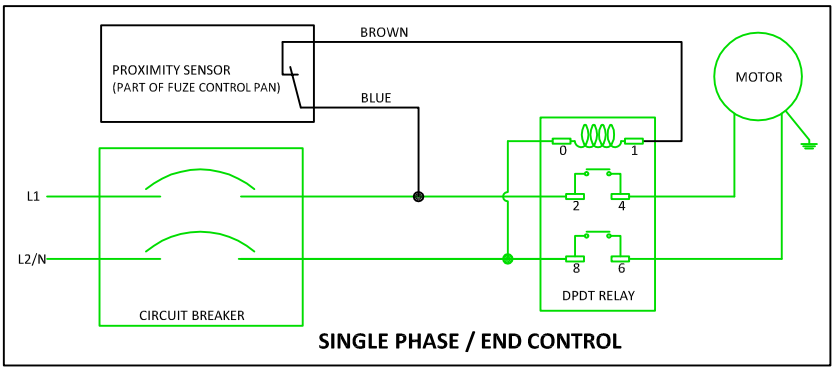

SINGLE PHASE / END CONTROL

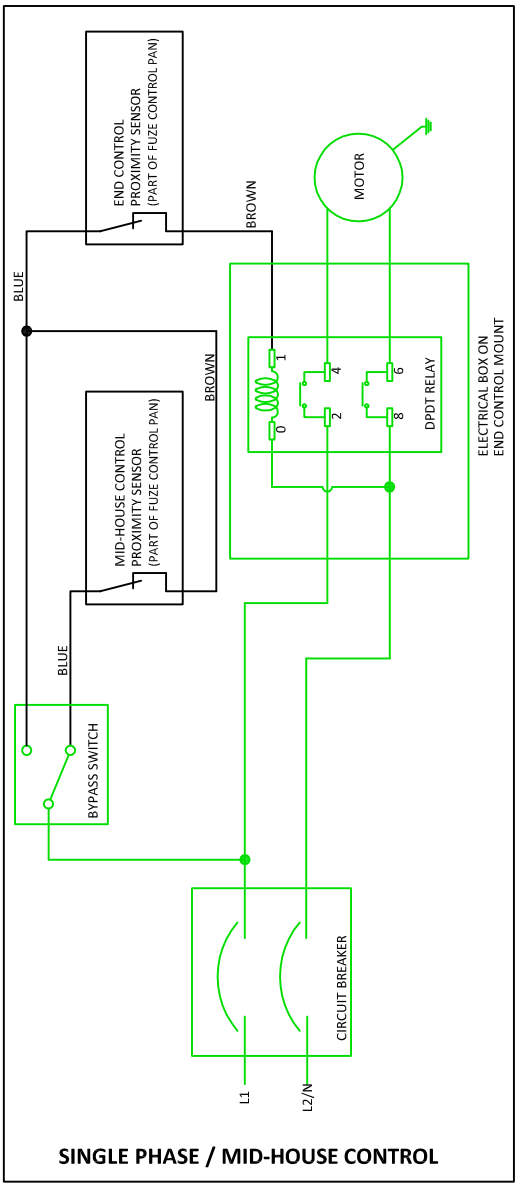

SINGLE PHASE / MID-HOUSE CONTROL

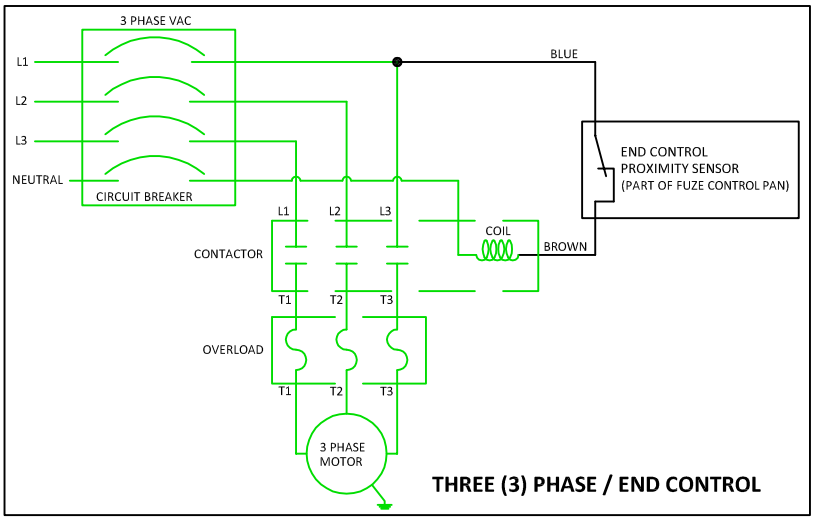

THREE (3) PHASE / END CONTROL

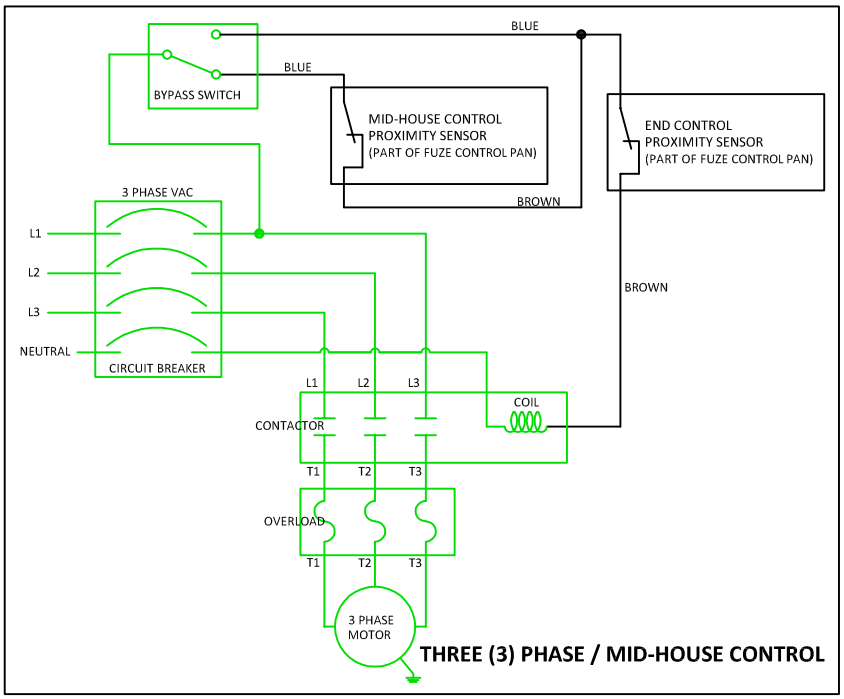

THREE (3) PHASE / MID-HOUSE CONTROL

Control Exploded View and Parts List

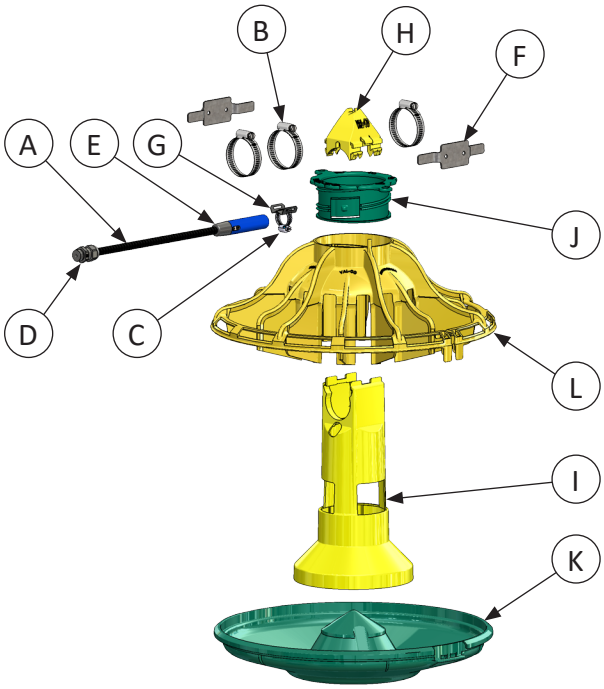

Easy Access Pan, Fuze V Collar for Easy Access Pan, and Fuze V Fin Easy Access Depth shown

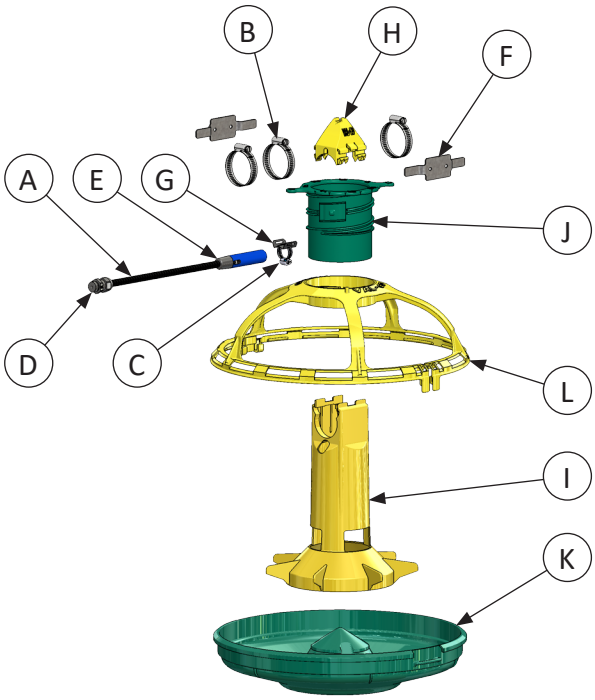

Standard Pan, Fuze Adj Collar for Standard Pan, and 5 Spoke with Hinge & Lock shown

Key	Part #	Description	Qty
Interchangeable Parts			
A	450965	3/8" CABLE COVER	2
B	451008	1-3/4" SS TUBE CLAMP	3
C	455928	7/8" HOSE CLAMP	1
D	713419	CORD GRIP	1
E	750437	SENSOR, PROXIMITY, DOL26	1
F	820158	FUZE NON-SWING BRACKET	2
G	820177	BRACKET, PROX SENSOR MTG	1
H	FE1550	FUZE FEEDER TOWER CAP	1
(parts specific to) **451800 - PROX CONTROL PAN, FUZE V, EASY ACCESS PAN, 2PC TWR**			
I	451802	FUZE V PROX CONTROL TOWER	1
J	451703	FUZE V COLLAR, EASY ACCESS	1
K	FE1610LS	14" FUZE EASY ACCESS PAN	1
L	451701	FUZE V FIN, EASY ACCESS DEPTH	1
(parts specific to) **451805 - PROX CONTROL PAN, FUZE V, STANDARD PAN, 2PC TWR**			
I	451802	FUZE V PROX CONTROL TOWER	1
J	451704	FUZE V COLLAR, STANDARD	1
K	FE1610S	14" FUZE SLOTTED STANDARD PAN W/ HINGE & LOCK	1
L	451706	FUZE V FIN, STANDARD DEPTH	1
(parts specific to) **455919 - FE1600RS PROX CONTROL PAN, 14" STANDARD PAN, 14 SPOKE**			
I	455926	FUZE PROX CONTROL TOWER	1
J	FE1540	FUZE ADJ COLLAR - STANDARD PAN	1
K	FE1610S	14" FUZE SLOTTED STANDARD PAN W/ HINGE & LOCK	1
L	FE1620R	14" FUZE PRO GRILL - 14 SPOKE W/ HINGE & LOCK	1
(parts specific to) **455920 - FE1500RS PROX CONTROL PAN, 13" STANDARD PAN, 13 SPOKE**			
I	455926	FUZE PROX CONTROL TOWER	1
J	FE1540	FUZE ADJ COLLAR - STANDARD PAN	1
K	FE1510S	13" FUZE SLOTTED STANDARD PAN W/ HINGE & LOCK	1
L	FE1520R	13" FUZE PRO GRILL - 13 SPOKE W/ HINGE & LOCK	1
(parts specific to) **455921 - FE1500RLS PROX CONTROL PAN, 13" SHALLOW PAN, 13 SPOKE**			
I	455926	FUZE PROX CONTROL TOWER	1
J	FE1540S	FUZE ADJ COLLAR - SHALLOW PAN	1
K	FE1510LS	13" FUZE SLOTTED SHALLOW PAN W/HINGE & LOCK	1
L	FE1520R	13" FUZE PRO GRILL - 13 SPOKE W/ HINGE & LOCK	1
(parts specific to) **455922 - FE1600RLS PROX CONTROL PAN, 14" SHALLOW PAN, 14 SPOKE**			
I	455926	FUZE PROX CONTROL TOWER	1
J	FE1540S	FUZE ADJ COLLAR - SHALLOW PAN	1
K	FE1610LS	14" FUZE SLOTTED SHALLOW PAN W/ HINGE & LOCK	1
L	FE1620R	14" FUZE PRO GRILL - 14 SPOKE W/ HINGE & LOCK	1
(parts specific to) **455923 - FE1800RS PROX CONTROL PAN, 14" STANDARD PAN, 5 SPOKE**			
I	455926	FUZE PROX CONTROL TOWER	1
J	FE1540	FUZE ADJ COLLAR - STANDARD PAN	1
K	FE1610S	14" FUZE SLOTTED STANDARD PAN W/ HINGE & LOCK	1
L	FE1820R	14" FUZE PRO GRILL - 5 SPOKE W/ HINGE & LOCK	1
(parts specific to) **455924 - FE1800RLS PROX CONTROL PAN, 14" SHALLOW PAN, 5 SPOKE**			
I	455926	FUZE PROX CONTROL TOWER	1
J	FE1540S	FUZE ADJ COLLAR - SHALLOW PAN	1
K	FE1610LS	14" FUZE SLOTTED SHALLOW PAN W/ HINGE & LOCK	1
L	FE1820R	14" FUZE PRO GRILL - 5 SPOKE W/ HINGE & LOCK	1

North America:
Phone: 800.99VALCO (800.998.2526)
Fax: 419.678.2200
Email: sales@val-co.com

International:
Phone: (+1) 419.678.8731
Fax: (+1) 419.678.2200
Email: intl.sales@val-co.com