Flag Joint Weather Hood
501595
Quicksheet

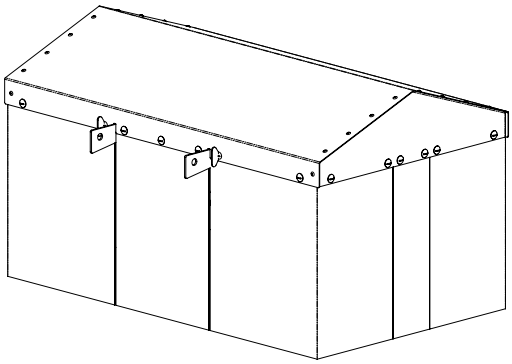

Flag Joint Weather Hood - Assembly Instructions

1. Attach (2) Curtains (501598) to the pre-assembled Roof (501596/501597), using (22) 5/16-18 x 3/4” truss bolts (501440), (22) 5/16-18 hex nuts (010603), and (22) 5/16” flat washers (690407), as supplied in the provided hardware bag (501594). Refer to Figure 1 for assembly orientation. Tighten all hardware.

Figure 1

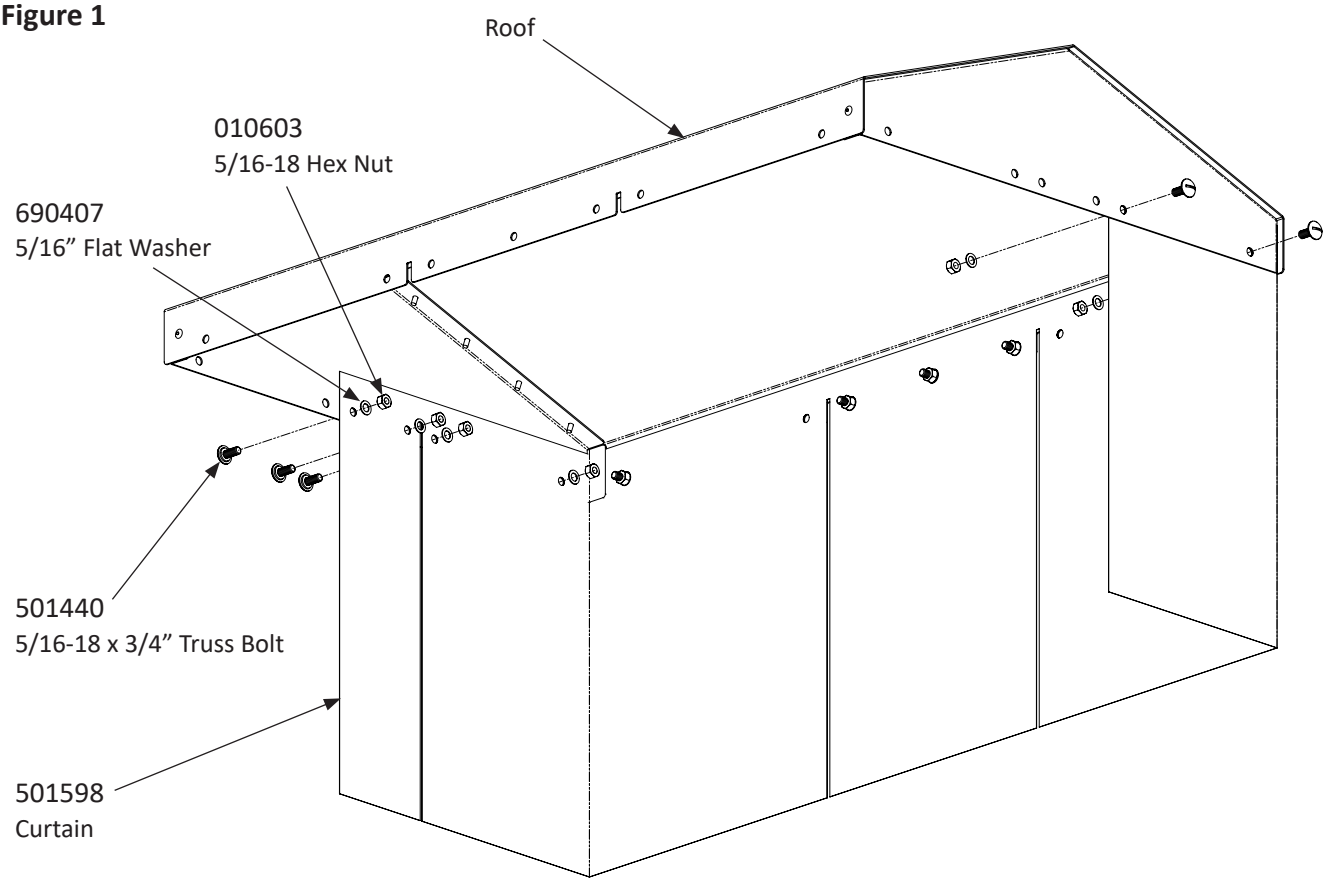

NOTE: Only one curtain is shown in this assembly view, for visual clarity.

©2026 Valco Industries, Inc.

2. Connect the Cross Bars to the existing Discharge Head Body and Motor to provide support for the previously assembled Roof and Curtain sub-assembly, using hardware supplied in the provided hardware bag (501594).

   Attach (1) Cross Bar (501599) to the Discharge Head Body using (1) 3/8-16 x 1-1/4" hex bolt (010666), (1) 3/8-16 Nylock nut (012481), (1) 3/8" flat washer (690093), and (1) Port Tube Spacer Plate (501584), as shown in Figure 2.

   NOTE: 740 Systems do **not** use the Port Tube Spacer Plate (501584), and in its place use (2) additional 3/8" flat washers (690093) as spacers.

Figure 2

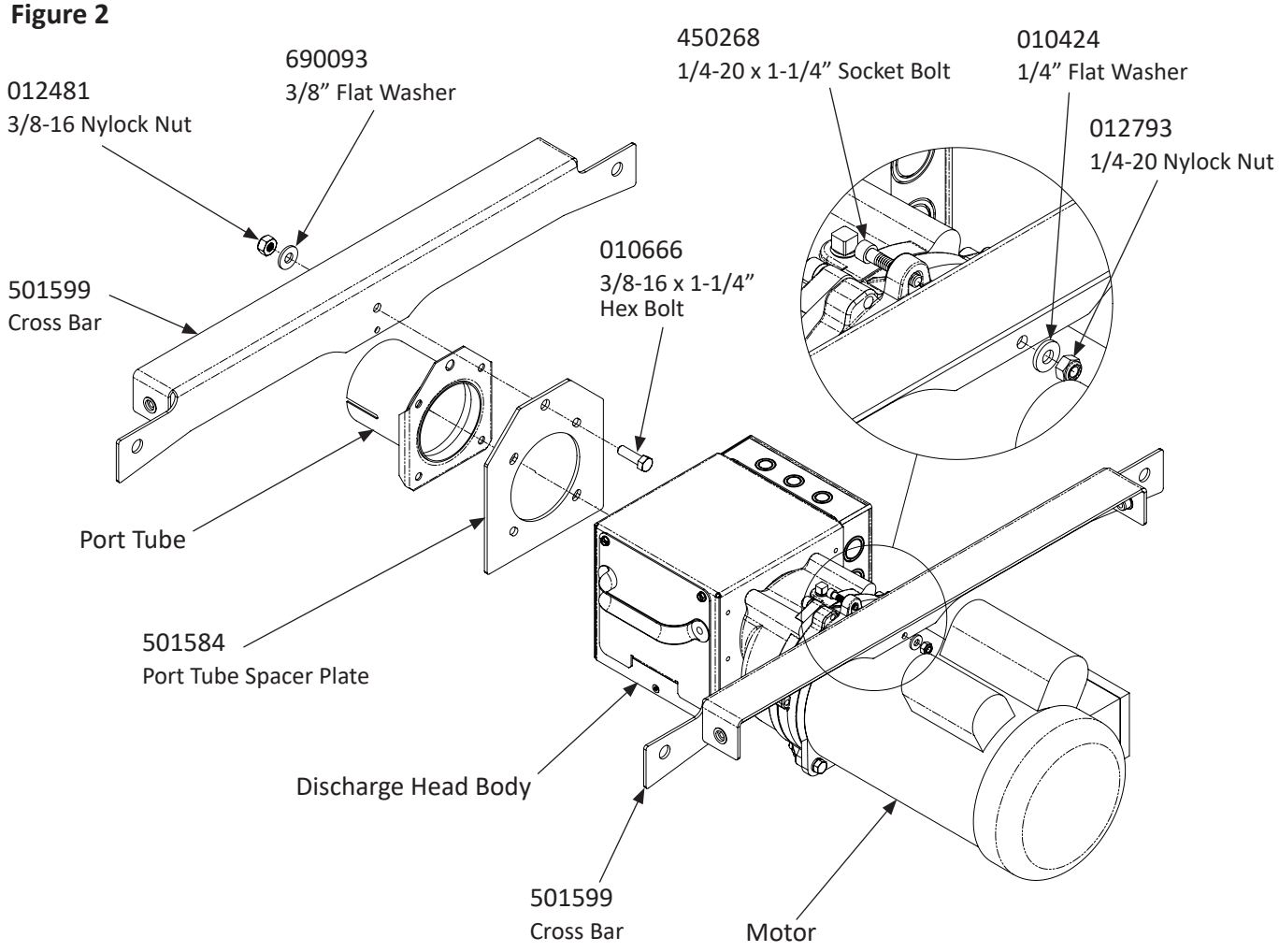

3. Attach (1) Cross Bar (501599) to the Motor using (1) 1/4-20 x 1-1/4" socket bolt (450268), (1) 1/4-20 Nylock nut (012793), and (1) 1/4" flat washer (010424), as shown in the detail view of Figure 2.

4. Attach assembled Roof and Curtain sub-assembly to the (2) Cross Bars that are attached to the Discharge Head Body and Motor. Lower the Roof and Curtain sub-assembly down over the Cross Bars, aligning the slots in the Roof with the end tabs in the Cross Bars. Secure the Roof to the Cross Bars with (4) 5/16" x 3/4" thumbscrews (102019), supplied in the provided hardware bag (501594) to complete assembly, as shown in Figure 3.

Figure 3

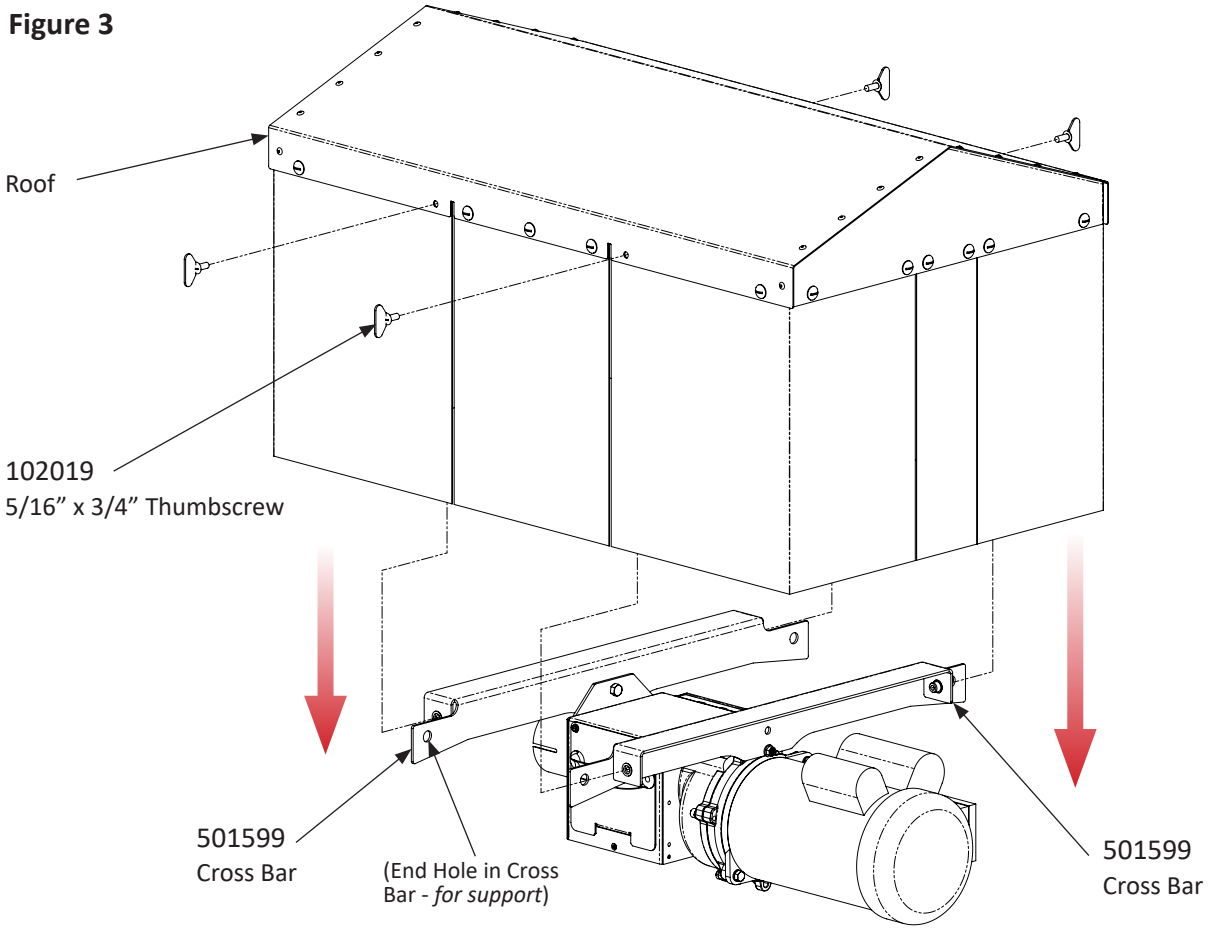

NOTE: The Flag Joint Weather Hood assembly must be properly supported. The total weight to be supported is 230 lbs.

- The assembly can be supported either from above, by the (4) end holes in the Cross Bars (501599), as shown in Figure 4, or from below, as shown in Figure 5.
- If supported from below, the same (4) end holes in the Cross Bars (501599) need proper support to prevent the Weather Hood from tipping over.

Figure 4

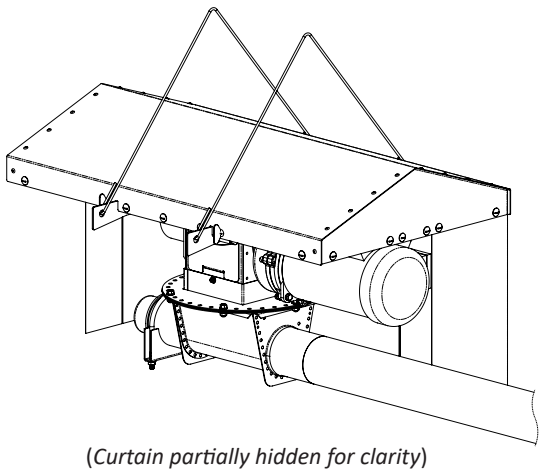

(*Curtain partially hidden for clarity*)

Figure 5

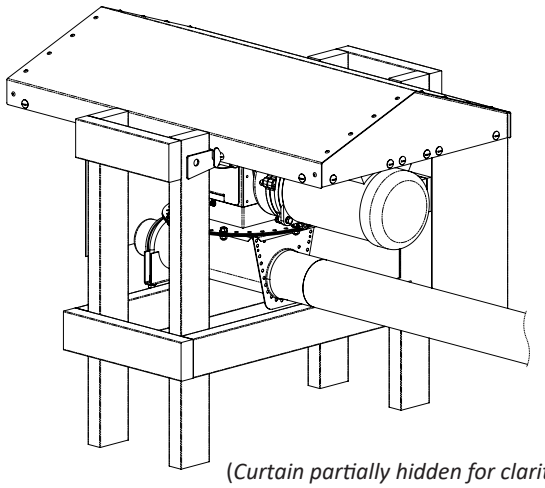

(*Curtain partially hidden for clarity*)

Flag Joint Weather Hood - Exploded Drawing and Parts List

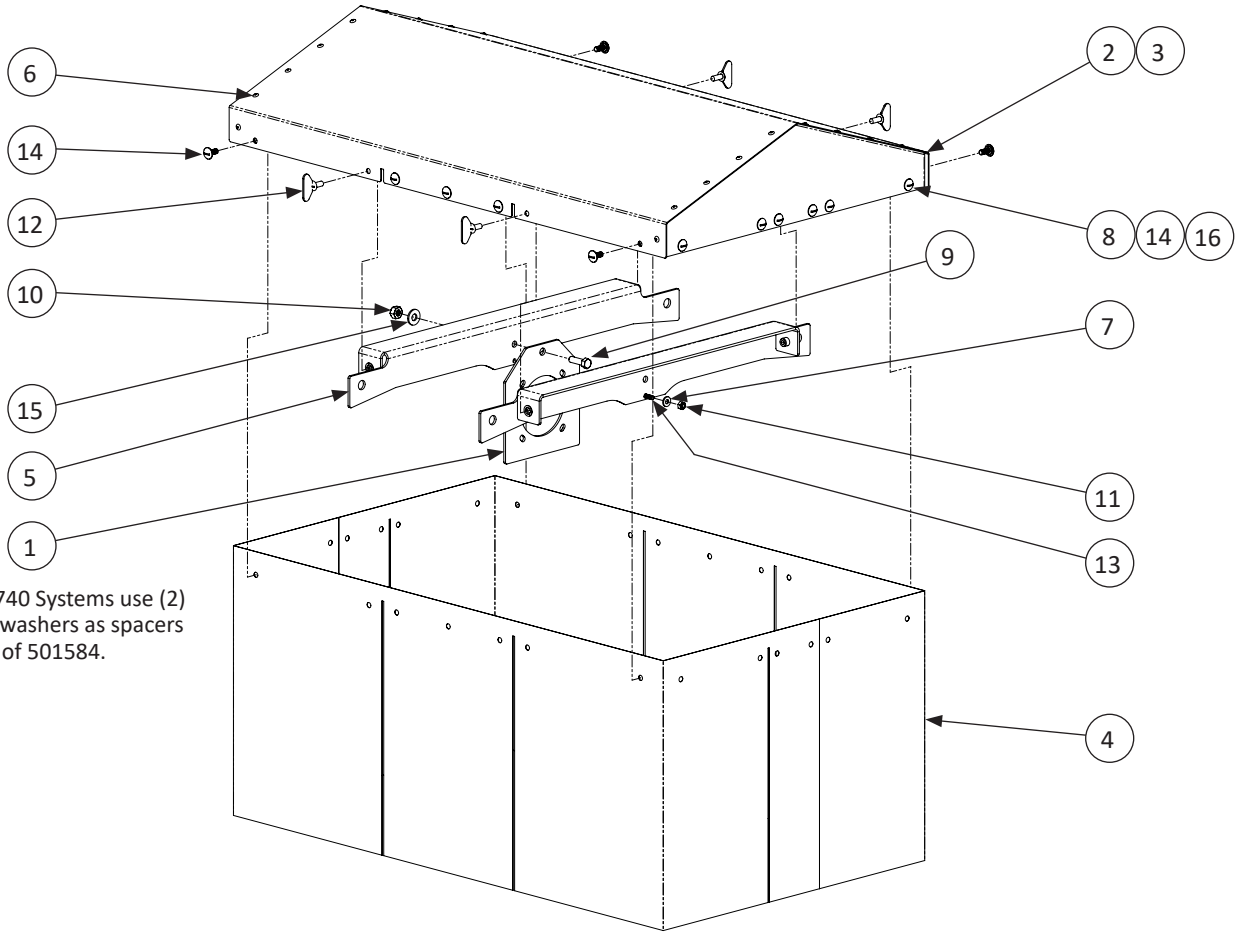

NOTE: 740 Systems use (2) 690093 washers as spacers in place of 501584.

KEY	PART #	DESCRIPTION	QTY
FLAG JOINT WEATHER HOOD (501595)			
1	501584	PLATE, PORT TUBE SPACER (*see note*)	1
-	501594	HARDWARE BAG FOR FLAG JOINT WEATHER HOOD	1
2	501596	ROOF	1
3	501597	END PANEL	2
4	501598	CURTAIN	2
5	501599	CROSS BAR	2
6	954099	3/16" X .126 X .250" POP RIVET	20
HARDWARE BAG FOR FLAG JOINT WEATHER HOOD (501594)			
7	010424	1/4" FLAT WASHER	1
8	010603	5/16-18 HEX NUT	22
9	010666	3/8-16 X 1-1/4" HEX BOLT	1
10	012481	3/8-16 NYLOCK HEX NUT	1
11	012793	1/4-20 NYLOCK HEX NUT	1
12	102019	5/16" X 3/4" THUMBSCREW	4
13	450268	1/4-20 X 1-1/4" SOCKET BOLT	1
14	501440	5/16-18 X 3/4" TRUSS BOLT	22
15	690093	3/8" FLAT WASHER	3
16	690407	5/16" FLAT WASHER	22

North America:
Phone: 800.99VALCO; 800.998.2526
Fax: 419.678.2200
Email: sales@val-co.com

International:
Phone: (+1) 419.678.8731
Fax: (+1) 419.678.2200
Email: intl.sales@val-co.com