NO.	PART #	REQ'D	PART NAME
1	SEE NOTE #3	1	HOUSING, HPM-36"
2	SEE TABLE	2	TUBE, UNIVERSAL MOTOR MOUNT, 36" HYPER MAX
3	SEE TABLE	2	MOTOR PLATE, DIRECT DRIVE, 36" HYPER MAX
4	SEE TABLE	1	MOTOR
5	SEE TABLE	1	BLADE
6	MH8097	8	BOLT, 5/16"-18 X 2 1/4", STD HD, S.S.
7	MH90044	8	NUT, HEX NYLOC, 5/16"-18, S.S.
8	MH8033	8	WASHER, 5/16 I.D., S.S. FLAT, .050 THK.
9	MH8091	4	BOLT, 5/16"-18 X 3/4", FLG H, S.S.
10	MH8056	4	NUT, 5/16"-18, FLG HD, S.S.
11	MH8124	4	BOLT, 3/8"-16 X 1 1/4", FLG HD, S.S.
12	MH8057	4	NUT, 3/8"-16, FLG HD, S.S.
13	ZZ1895	1	CAUTION STICKER (SHUTTER)
14	ZZ1897V	1	VALCO NAMEPLATE
15	MH90304	2	RIVET, POP, ALUM, 1/8 X .265
16	MH8045	1	LABEL, ASSEMBLED WITH PRIDE
17	ZFB306	1	TRANTORQUE, .62" I.D. X 1.75" O.D., (only w/ cast blade)
18	X	X	X

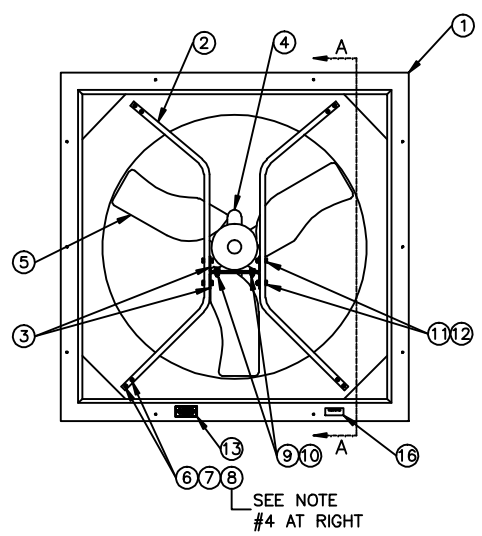

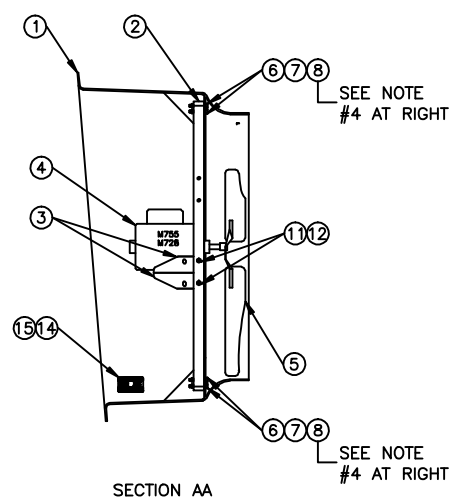

SECTION AA

MODEL	#2 MOUNT TUBE	#3 MOTOR PLATE	#4 MOTOR	#5 BLADE
HPM36x280MCA	FP523	FP515	M728	B717
HPM36x280MGA	FP522	FP513	M728	B709G
HPM36x280MNA	FP522	FP513	M728	B717
HPM36x280MSA	FP523	FP515	M728	B709
HPM36x550MCA	FP523	FP515	M755	B717
HPM36x550MGA	FP522	FP513	M755	B709G
HPM36x550MNA	FP522	FP513	M755	B717
HPM36x550MSA	FP523	FP515	M755	B709

NOTES:

1. THE "CAUTION STICKER" AND THE "ASSEMBLED WITH PRIDE" STICKER SHALL BE APPLIED TO THE INTAKE SIDE OF THE HOUSING FLANGE.

2. THE VALCO NAMEPLATE SHALL BE RIVETED ON THE INSIDE OF THE LEFT SIDE OF THE HOUSING WHERE INDICATED.

3. THE "W" IN THE MODEL NUMBER INDICATES A WHITE HOUSING (PART # FP348W) AND MAY BE REPLACED WITH A "B" FOR A BLACK HOUSING (PART # FP348).

4. THE WASHER (PART # MH8033) SHALL BE INSTALLED ON THE OUTSIDE OF THE HOUSING AGAINST THE HOUSING.

5. THE KEY SUPPLIED WITH THE MOTOR IS ONLY USED ON THE GALVANIZED AND STAINLESS STEEL BLADES AND IS NOT USED ON THE CAST BLADE. THE TRANTORQUE IS USED ON THE CAST BLADE.

TOLERANCES UNLESS OTHERWISE SPECIFIED	DATE 050506	ASSEMBLY INSTRUCTIONS FOR HPM-36" DIRECT DRIVE	RAYDOT LLC Success Is In The Air
FRACTIONS ± 1/32	DRAWN JMH		
DECIMALS	CHKD		
	APPROVED		
	SCALE NONE	ASSEMBLY DRAWING	
	NEW	SCALE NONE SHEET 1 OF 1	NEW DRAWING NUMBER FP544

The HPM 36 fan cone parts start with C1:
C1 Cone panels IN BLACK LONG FIBERGLASS FC36LB KIT SCREEN INCLUDE OR FPN349 SEGMENTS (2 REQUIRED)
IN BLACK SHORT POLY PC36LB (1 REQUIRED)

IN WHITE LONG FIBERGLASS FC36LW KIT SCREEN INCLUDED OR FPN349W SEGMENTS(2 REQUIRED)
IN WHITE SHORT POLY PC36LW (1 REQUIRED)

C2 Guard screen FP406CH (1 REQUIRED)
The above parts will also require the parts below
C3 BOLTS MH8061 (18 REQUIRED)
C4 NUTS MH8055 (28 REQUIRED)
C5 SCREWS MH8206 (12 REQUIRED)
C6 SCREWS WAFER HEAD MH90429 (9 REQUIRED)
INSTRUCTIONS IS10032

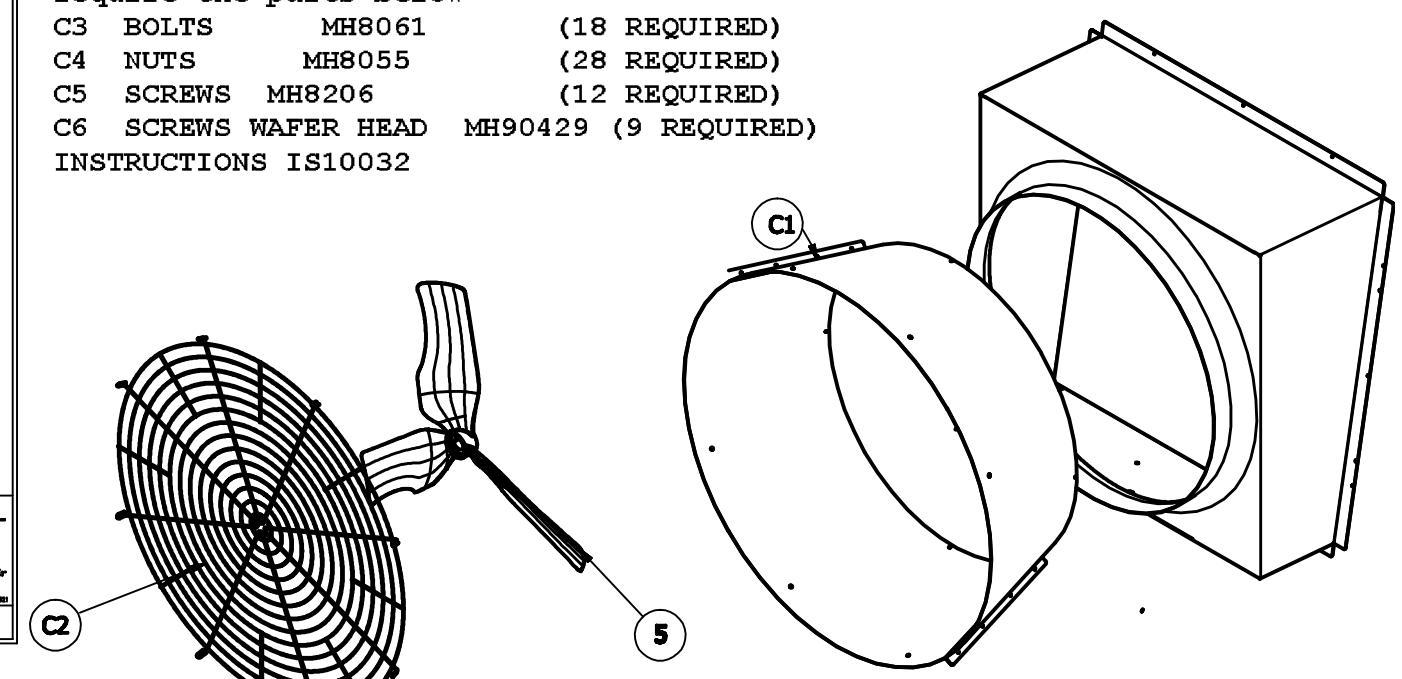

B709 BLADE 36" 5/8" ID GALV DIRECT DRIVE
B709G BLADE 36" 5/8" ID SS DIRECT DRIVE
B717 BLADE 36" 1.75" ID CAST ALUM REQUIRES THE ZFB306 .62" ID X 1.75" OD TRANTORQUE