OASIS RECIRCULATING PAD SYSTEM WITH BASIN: REPAIR PARTS

990283

BILL OF MATERIALS			
ITEM #	PART #	QTY	DESCRIPTION
1	813033	1	BASIN, PLASTIC, 18" X 30"
2	813035	1	COVER, BASIN, 18"
3	813030	1	ADPTR,4 MNPTx4 SOC
4	813031	1	ELBOW,4 SPGx4 SOC
5	813032	1	CAP, ADAPTER, PVC, 8" X 4"
6	813036	1	SEAL, 4" PIPE
7	412552	1	TUBE, WEIGHT, 4.50 X 8.38, PVC
8	813023	1	3/4" PLAIN PVC PIPE (3" LG)
9	PABV15	1	1-1/2" PVC BALL VALVE
10	PAF200	1	LINE FILTER FOR RECIRCULATING 6" PAD SYSTEM
11	PAT340	1	TEE,1-1/2 SOCx1-1/2 SOCx3/4SOC
12	VT107	1	BUSH,3/4 SPGx1/2 FNPT
13	VT200	2	1 1/2" 90 DEGREE PVC ELL
14	VX150	2	UNION,1-1/2 SOCx1-1/2 SOC
15	VV801	1	3/4" BALL VALVE SCHEDULE 80
16	VRP71	1	ADPTR,1/2 BARBx1/2 MNPT
17	VRP500	1	1/2" HOSE CLAMP (USE W/ VRP77)
18	VRP77	3	1/2" ID YELLOW PVC DROP HOSE
19	SEE CHART	1	SUBMERSIBLE PUMP
20	SEE CHART	1	REDUCING MALE ADAPTER
21	VT194	1	1 1/2" PLAIN PVC TEE
22	PAA15	2	1 1/2" PVC MALE ADAPTER
23	813061	3	INLET COVER, PIPE
24	813063	2	GAP COVER, PIPE

ITEM #	ASSEMBLY PART NUMBER		
	813049	813041	813045
19	PAP30	PAP60	813060
20	PAA15	PAA15	PAA17

REPAIR PARTS: FLOAT KIT

BILL OF MATERIALS (813055) FLOAT KIT, WATER INLET			
ITEM #	PART #	QTY	DESCRIPTION
1	011230	1	STUD, 1/4-20 X 6", 316 SS
2	012679	4	NUT, HEX, 1/4-20
3	813053	1	CLAMP, PIPE, 1-5/16", SS
4	813054	1	CLAMP, PIPE, 1-7/8", SS
5	820000	1	NIPPLE, 1" X 24" LONG MNPT
6	820001	1	BALL VALVE, 1" FNPT
7	PAF150HF	1	FLOAT VALVE, 1" FNPT

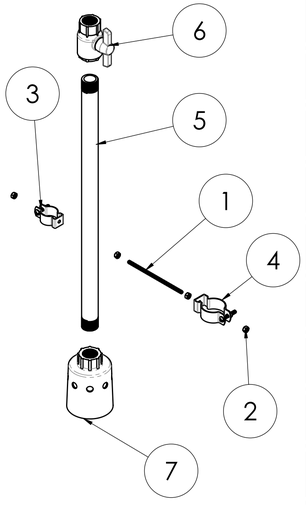

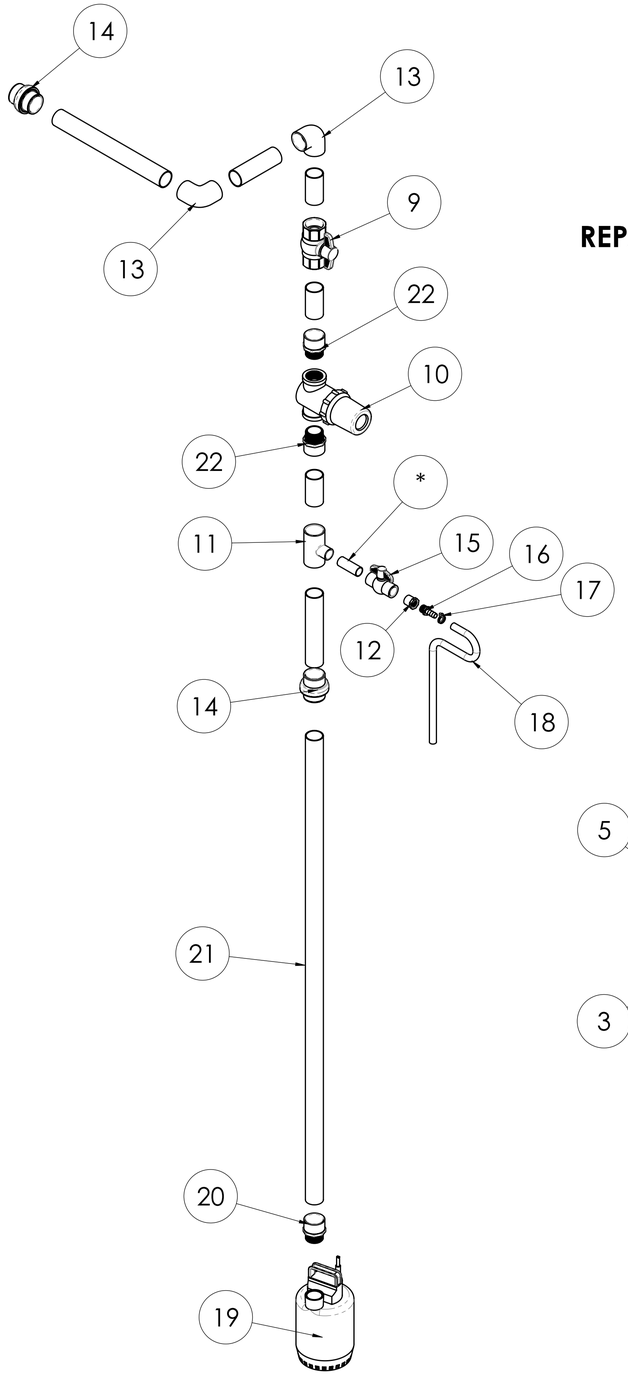

REPAIR PARTS: END-FED HEADER KIT

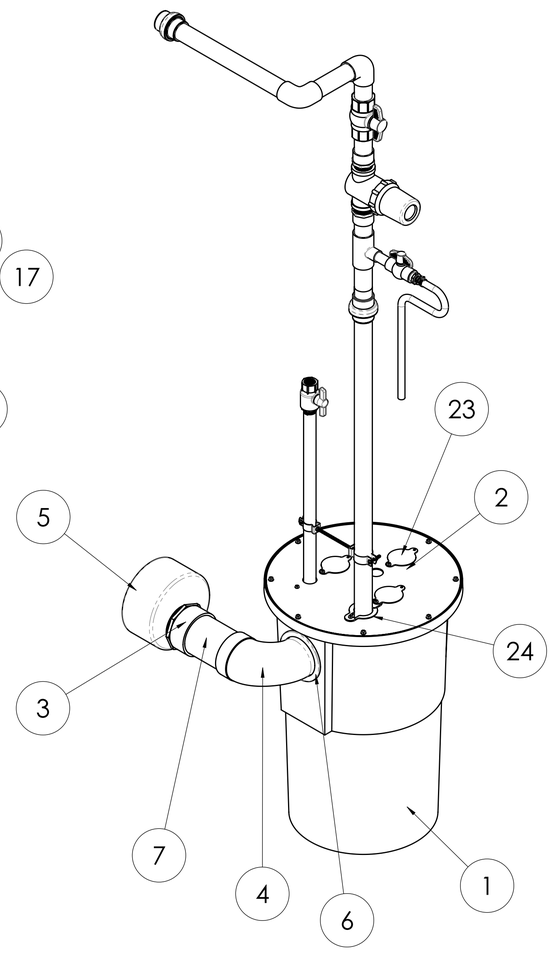

UNSPECIFIED TOLERANCES 2 PLACE ±.060 3 PLACE ±.030 4 PLACE ±.010 HOLE DIA. ±.010 ANGULAR ±1°	DIMENSIONS ARE IN INCHES DIMENSIONS IN ( ) ARE MILLIMETERS UNLESS OTHERWISE SPECIFIED. DO NOT SCALE	VALCO INDUSTRIES, INC. PO BOX 8 NEW HOLLAND, PA 17557
This drawing and any print thereof is the property of VALCO COMPANIES INC. and is subject to return on request by this company. The information shown is confidential and the recipient by accepting this drawing agrees not to use any information contained thereon in any manner which will be detrimental to VALCO COMPANIES INC.	DATE 4/26/23 DRAWN TRC CHECK WEIGHT SCALE NTS	DESCRIPTION 1 REPAIR PARTS DESCRIPTION 2 COOL CELL, BASIN SHEET 1 OF 5 990283-RP REV. A

BILL OF MATERIALS (CENTER FED HEADER KIT)			
ITEM #	PART #	QTY	DESCRIPTION
1	813033	1	BASIN, PLASTIC, 18" X 30"
2	813035	1	COVER, BASIN, 18"
3	813030	2	ADPTR,4 MNPTx4 SOC
4	813039	1	TEE,4 SOC ALL
5	813032	2	CAP, ADAPTER, PVC, 8" X 4"
6	813036	1	SEAL, 4" PIPE
7	412552	3	TUBE, WEIGHT, 4.50 X 8.38, PVC
8	813023	1	3/4" PLAIN PVC PIPE (3" LG)
9	PAA15	2	ADPTR,1-1/2 MNPTx1-1/2 SOC
10	PABV15	1	1-1/2" PVC BALL VALVE
11	PAF200	1	LINE FILTER FOR RECIRCULATING 6" PAD SYSTEM
12	PAT340	1	TEE,1-1/2 SOCx1-1/2 SOCx3/4SOC
13	VRP71	1	ADPTR,1/2 BARBx1/2 MNPT
14	VRP77	3	1/2" ID YELLOW PVC DROP HOSE
15	VRP500	1	1/2" HOSE CLAMP (USE W/ VRP77)
16	VT107	1	BUSH,3/4 SPGx1/2 FNPT
17	VT199	1	TEE,1-1/2 SOC ALL
18	VT200	1	1 1/2" 90 DEGREE PVC ELL
19	VV801	1	3/4" BALL VALVE SCHEDULE 80
20	VX150	3	UNION,1-1/2 SOCx1-1/2 SOC
21	ZB1401	1	BAG, 4X6X4MIL, RECLOSABLE
22	VT194	1	1 1/2" PLAIN PVC TEE
23	SEE CHART	1	REDUCING MALE ADAPTER
24	SEE CHART	1	SUBMERSIBLE PUMP
25	813061	3	INLET COVER, PIPE
26	813063	2	GAP COVER, PIPE

ITEM #	ASSEMBLY PART NUMBERS	
	813043	813047
22	PAA15	PAA17
23	PAP60	813060

REPAIR PARTS: CENTER-FED HEADER KIT

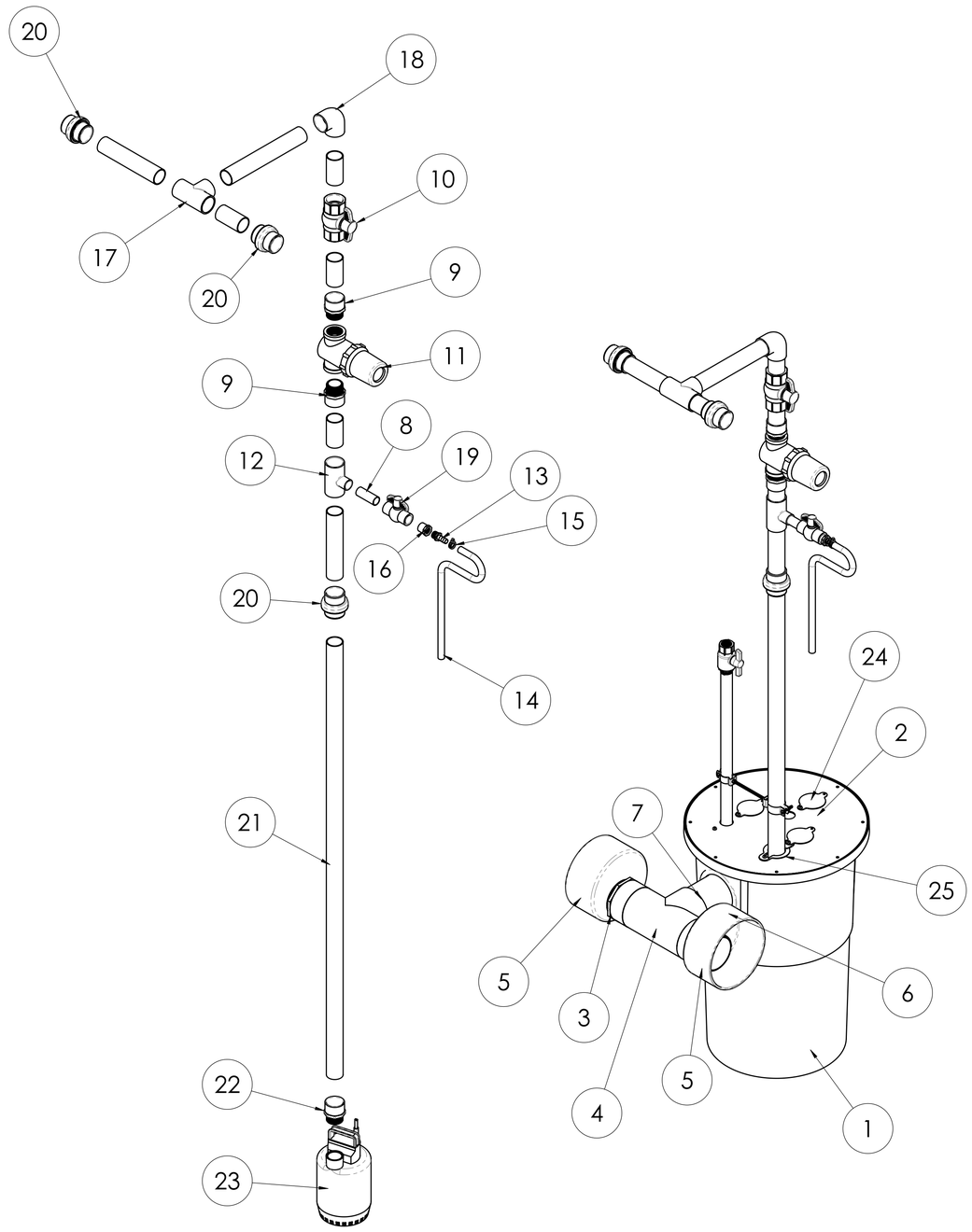

REPAIT PARTS: FLOAT KIT

BILL OF MATERIALS (813055) FLOAT KIT, WATER INLET			
ITEM #	PART #	QTY	DESCRIPTION
1	011230	1	STUD, 1/4-20 X 6", 316 SS
2	012679	4	NUT, HEX, 1/4-20
3	813053	1	CLAMP, PIPE, 1-5/16", SS
4	813054	1	CLAMP, PIPE, 1-7/8", SS
5	820000	1	NIPPLE, 1" X 24" LONG MNPT
6	820001	1	BALL VALVE, 1" FNPT
7	PAF150HF	1	FLOAT VALVE, 1" FNPT

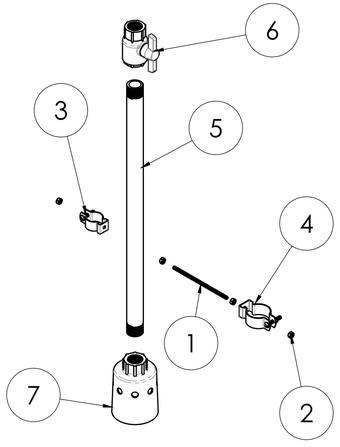

UNSPECIFIED TOLERANCES
2 PLACE ± .060
3 PLACE ± .030
4 PLACE ± .010
HOLE DIA. ± .010
ANGULAR ± 1°

DIMENSIONS ARE IN INCHES
DIMENSIONS IN ( ) ARE MILLIMETERS
UNLESS OTHERWISE SPECIFIED.
DO NOT SCALE

This drawing and any print thereof is the property of VALCO COMPANIES INC. and is subject to return on request by this company. The information shown is confidential and the possession of or viewing of this drawing agrees not to use any information contained herein in any manner which will be detrimental to VALCO COMPANIES INC.

DATE 4/26/23
DRAWN TRC
CHECK
WEIGHT
SCALE NTS

VALCO INDUSTRIES, INC.
PO BOX 8
NEW HOLLAND, PA 17557

DESCRIPTION 1 REPAIR PARTS
DESCRIPTION 2 COOL CELL, BASIN

SHEET 2 OF 5 | 990283-RP | REV. A

BILL OF MATERIALS (OPEN TOP PAK610EZO / CLOSED TOP 813102)				
ITEM #	OPEN TOP PT #	CLOSED TOP PT #	QTY	DESCRIPTION
1	813029	813029	1	TROUGH, COOL PAD, 10', STD
2	PAB250	PAB250	5	PIPE BRACKET FOR 6"
3	PAC607	813099	1	TOP PAD COVER
4	PAC608	-	1	OPEN TOP PAD RETAINER 120" LONG
5	PAC609	813101	5	TOP PIPE BRACKET 1-1/2" LONG
6	PACROD	PACROD	1	SEAL BETWEEN TROUGH AND WALL (10 FT)
7	PAE500	813100	1	TOP MOUNTING RAIL
8	PAP150DS	PAP150DS	1	1 1/2" PVC(10')W/ 7/64" HOLE
9	PAP860	PAP860	1	COUPLER FOR PAP800WT
10	PAS250	PAS250	20	#12 x 1 1/2" SELF-DRILLING
11	VT198	VT198	1	COUPLER,1-1/2

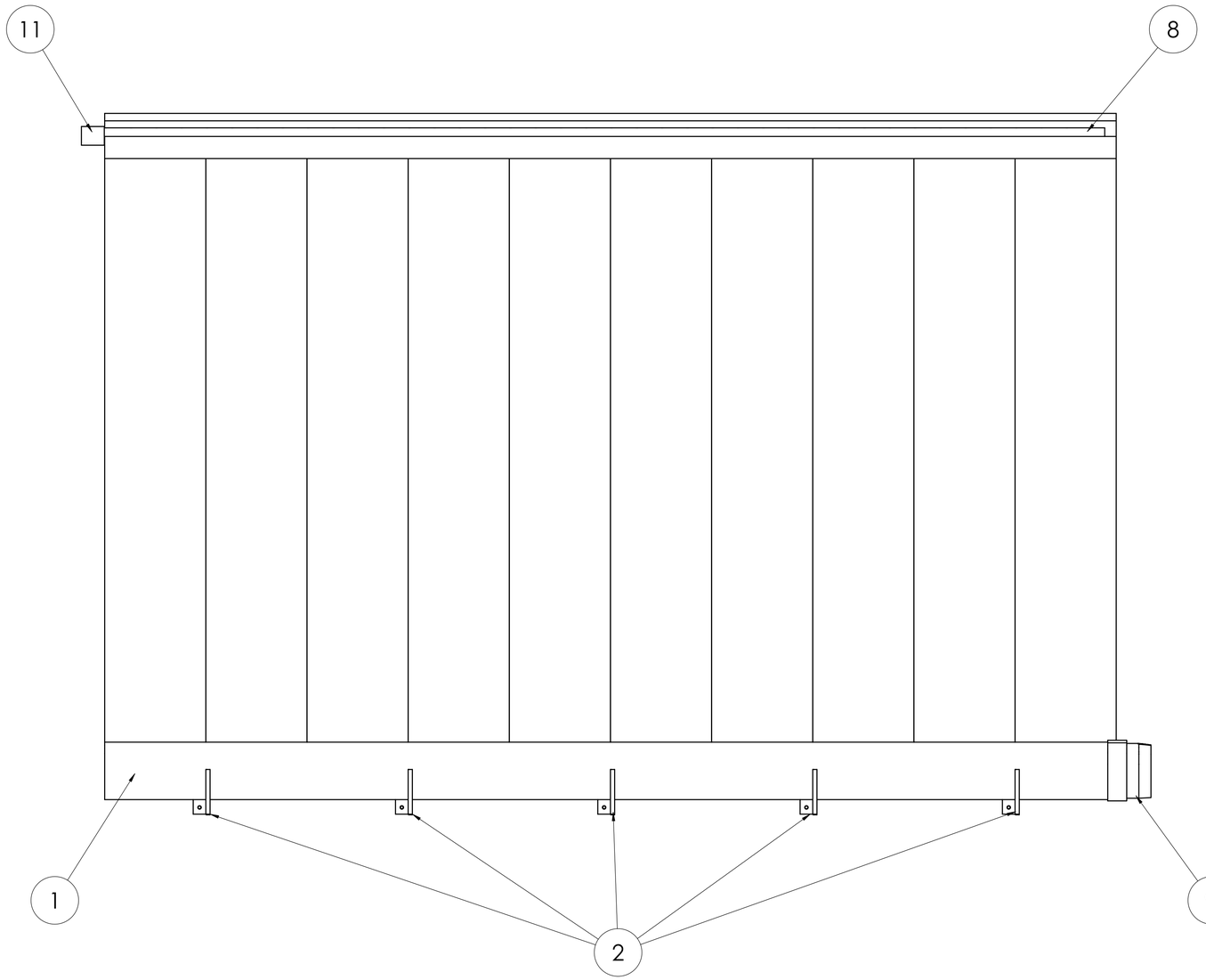

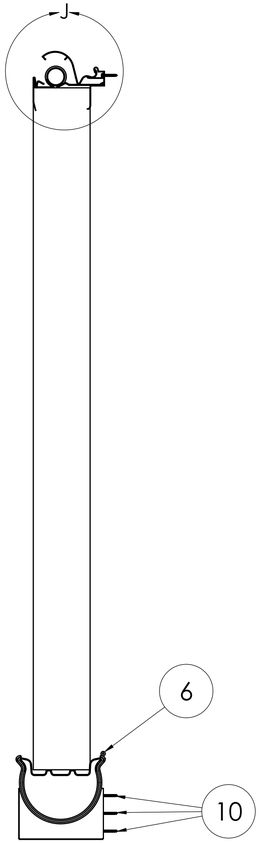

DETAIL J

CLOSED TOP

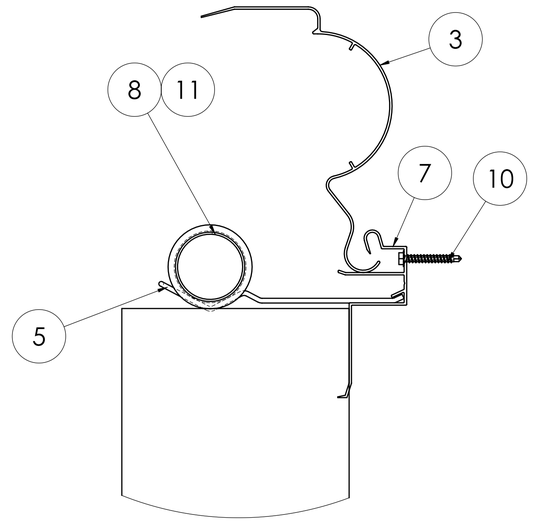

OPEN TOP

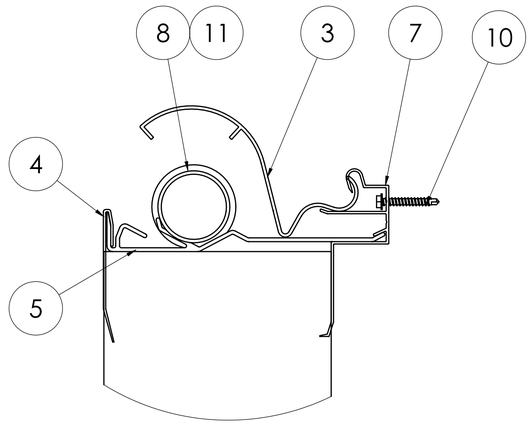

UNSPECIFIED TOLERANCES 2 PLACE ± .060 3 PLACE ± .030 4 PLACE ± .010 HOLE DIA. ± .010 ANGULAR ± 1°	DIMENSIONS ARE IN INCHES DIMENSIONS IN ( ) ARE MILLIMETERS UNLESS OTHERWISE SPECIFIED. DO NOT SCALE	VALCO INDUSTRIES, INC. PO BOX 8 NEW HOLLAND, PA 17557	
This drawing and any print thereof is the property of VALCO COMPANIES INC. and is loaned subject to an agreement by the company. The information shown is confidential and the recipient by accepting this print agrees not to use any information contained thereon in any manner which will be detrimental to VALCO COMPANIES INC.	DATE 4/26/23 DRAWN TRC CHECK WEIGHT SCALE NTS	DESCRIPTION 1 REPAIR PARTS DESCRIPTION 2 COOL CELL, BASIN	
		SHEET 3 OF 5	990283-RP REV. A

BILL OF MATERIALS (OPEN TOP PAK610EZO-E / CLOSED TOP 813103)				
ITEM #	OPEN TOP PART #	CLOSED TOP PART #	QTY	DESCRIPTION
1	813029	813029	1	TROUGH, COOL PAD, 10', STD
2	PAB25010	PAB25010	5	PIPE BRACKET FOR EXTENDED 6"
2	PAC607	813099	1	TOP PAD COVER
4	PAC608	-	1	OPEN TOP PAD RETAINER 120" LONG
5	PAC609	813101	5	OPEN TOP PIPE BRACKET 1-1/2" LONG
6	PAE500	813100	1	TOP MOUNTING RAIL
7	PAEA17510	PAEA17510	1	8" EXTENDED TOP ADAPTER PLATE
8	PAEZEXT	PAEZEXT	1	EXTENDER PLATE FOR EZ TROUGH
9	PAP150DS	PAP150DS	1	1 1/2" PVC(10')W/ 7/64" HOLE
10	PAP860	PAP860	1	COUPLER FOR PAP800WT
11	PAS250	PAS250	53	#12 x 1 1/2" SELF-DRILLING
12	VT198	VT198	1	COUPLER,1-1/2

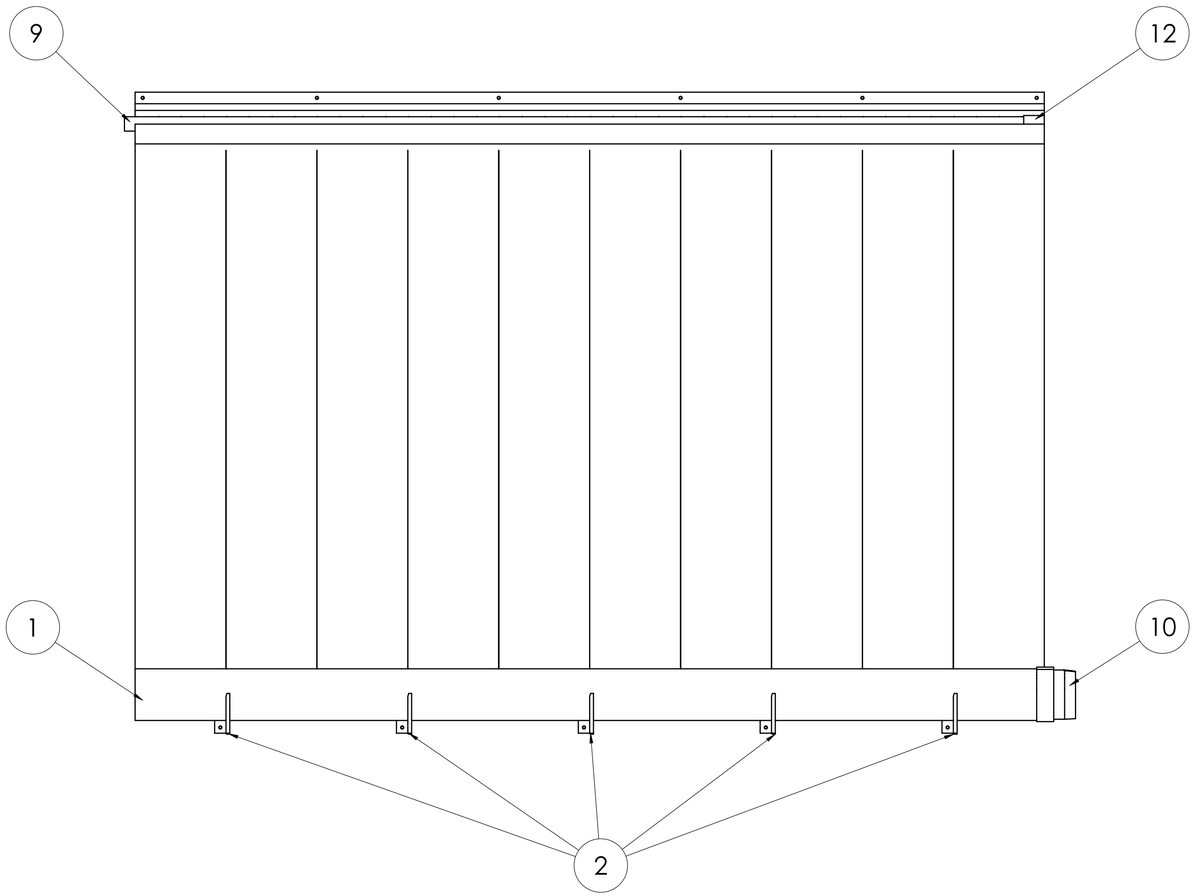

OPEN TOP

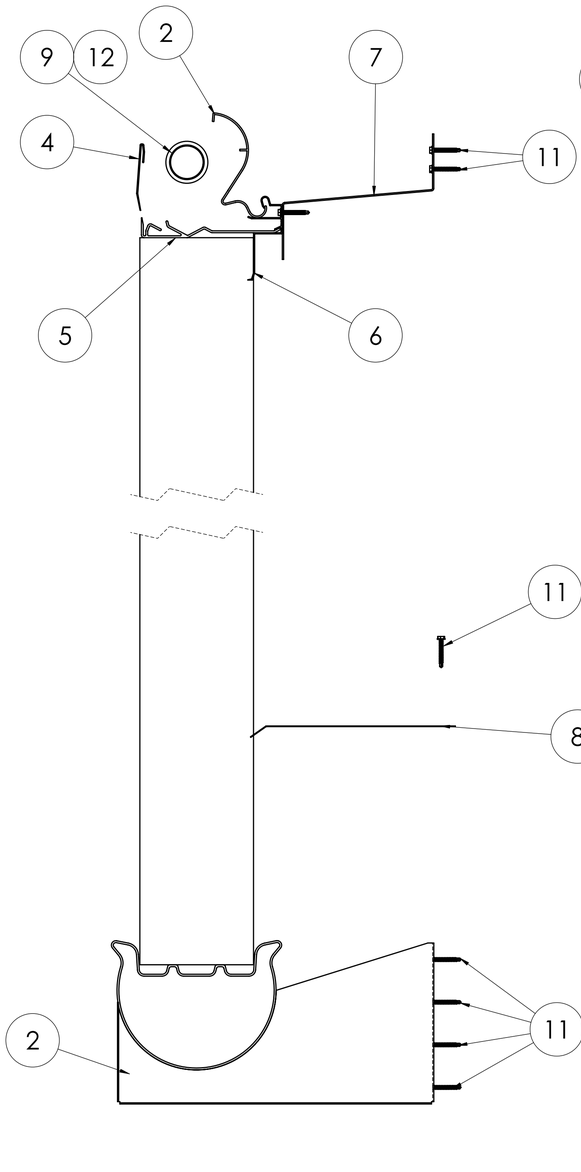

CLOSED TOP

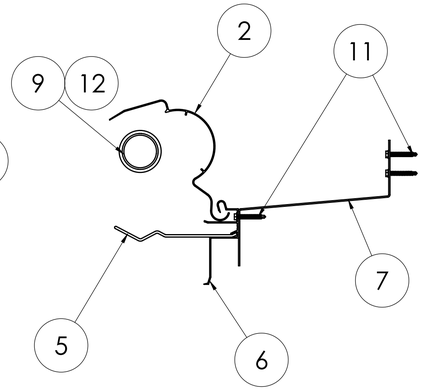

EXPLODED SIDE VIEW

UNSPECIFIED TOLERANCES 2 PLACE ± .060 3 PLACE ± .030 4 PLACE ± .010 HOLE DIA. ± .010 ANGULAR ± 1°	DIMENSIONS ARE IN INCHES DIMENSIONS IN [ ] ARE MILLIMETERS UNLESS OTHERWISE SPECIFIED. DO NOT SCALE	VALCO INDUSTRIES, INC. PO BOX 8 NEW HOLLAND, PA 17557
This drawing and any print thereof is the property of VALCO COMPANIES INC. and is subject to return on demand. All rights reserved. This information shown is confidential and the recipient by accepting this drawing agrees not to use or disclose the information thereon in any manner which will be detrimental to VALCO COMPANIES INC.	DATE 4/26/23 DRAWN TRC CHECK WEIGHT SCALE NTS	DESCRIPTION 1 REPAIR PARTS DESCRIPTION 2 COOL CELL, BASIN SHEET 4 OF 5 · 990283-RP · REV. A

BILL OF MATERIALS (PAEC6/PAEC6-E/813025))

ITEM #	FLUSH MOUNT PART #	EXTENDED MOUNT PART #	FLUSH MOUNT (2 M TALL) PART #	QTY	DESCRIPTION
1	813011	813011	813011	1	CAP, 8" SDR 35 PIPE
2	PABV15	PABV15	PABV15	1	1-1/2" PVC BALL VALVE
3	PAC800	PAC80010	813026	2	ALUM. SIDE COVER FOR 6" PAD
4	PAP865	PAP865	PAP865	2	END ADAPTER FOR PAP800WT
5	PAS250	PAS250	PAS250	8	#12 x 1 1/2" SELF-DRILLING
6	VT198	VT198	VT198	1	COUPLER,1-1/2
7	VT200	VT200	VT200	1	1 1/2" 90 DEGREE PVC ELL
8	VX150	VX150	VX150	1	UNION,1-1/2 SOCx1-1/2 SOC

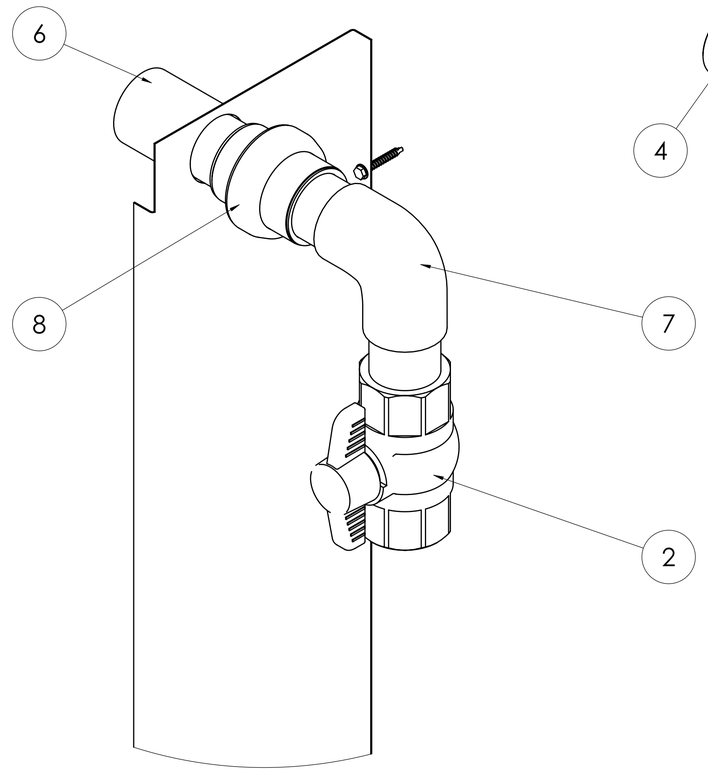

DETAIL K

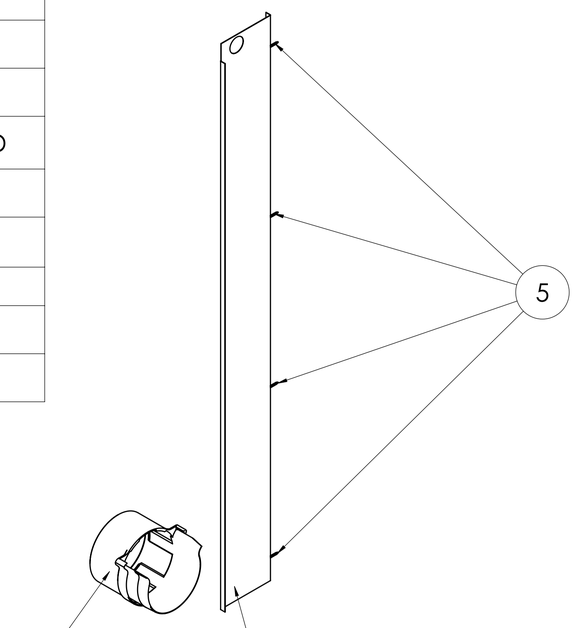

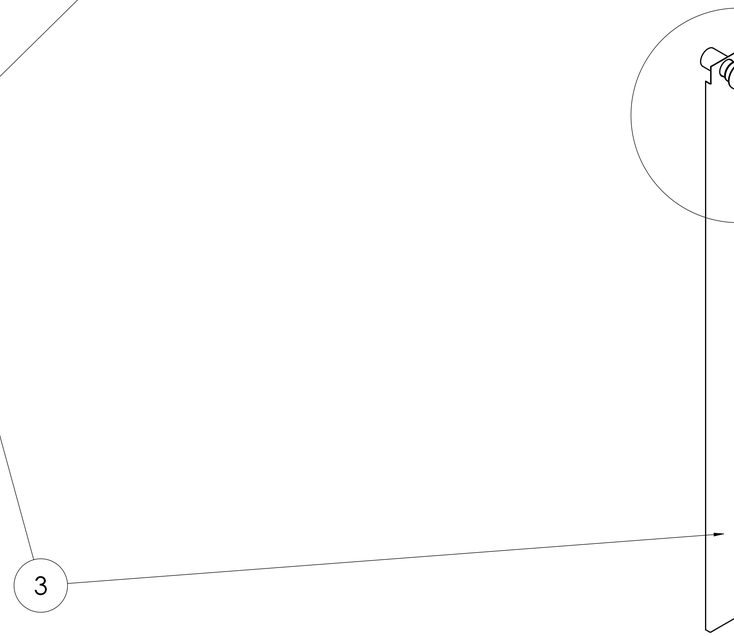

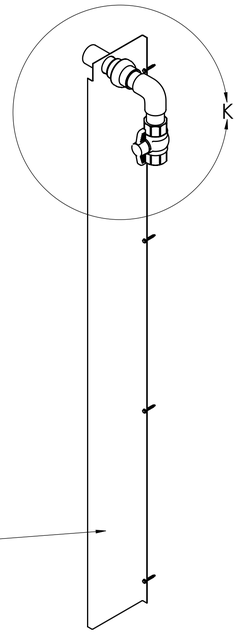

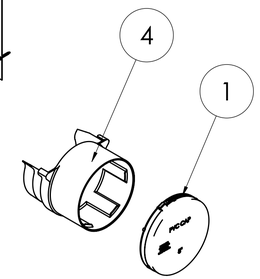

UNSPECIFIED TOLERANCES 2 PLACE ± .040 3 PLACE ± .030 4 PLACE ± .010 HOLE DIA. ± .010 ANGULAR ± 1°	DIMENSIONS ARE IN INCHES DIMENSIONS IN ( ) ARE MILLIMETERS UNLESS OTHERWISE SPECIFIED. DO NOT SCALE	VALCO INDUSTRIES, INC. PO BOX 8 NEW HOLLAND, PA 17557	
This drawing and any print thereof is the property of VALCO & the property is on loan and is subject to return on request by this company. The information shown is the exclusive property of recipient by accepting this drawing agrees not to use any information contained herein in any manner which will be detrimental to VALCO COMPANIES INC.	DATE 4/26/23 DRAWN TRC CHECK WEIGHT SCALE NTS	DESCRIPTION 1 REPAIR PARTS DESCRIPTION 2 COOL CELL, BASIN	
		SHEET 5 OF 5	990283-RP REV. A