36”, 50”, 54” HyperMAX™ Fans

Repair Parts List

54” Fans

954200, 954200-BW, 954200-SC, 954201, 954201-SC, 954205, 954206, 954210, 954210-BW, 954210-SC, 954211, 954211-SC, 954215, 954216, 954240, 954241, 954245, 954245-BW, 954245-SC, 954246, 954246-SC, 954255, 954255-SC, 954256, 954256-SC, 954280, 954280-BW, 954280-SC, 954281, 954281-SC, 954285, 954286, 954295, 954296, 954800, 954800-BW, 954800-SC, 954810, 954810-BW, 954810-SC, 954815, 954840, 954845, 954880, 954880-BW, 954880-SC

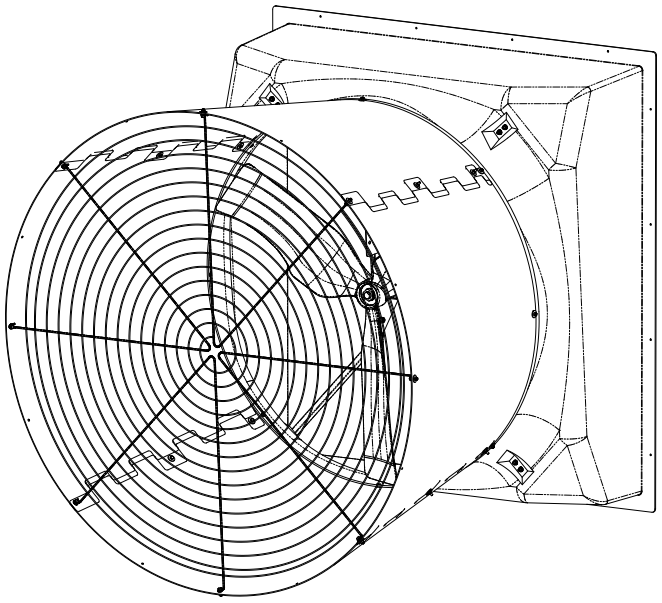

50” Fans

950140, 950140-BW, 950140-SSHW, 950225, 950225-SSHW, 950235, 950235-SSHW, 950255, 950255-BW, HPM50W340MCAT, HPM50W340MCAT-BW, HPM50W340MNAT, HPM50W340MSAT, HPM50W420LCAT, HPM50W420LNAT, HPM50W600MCAT, HPM50W600MNAT, HPM50W420LNAT-BW, HPM50W600MNAT-BW

36” Belt Drive Fans

936310, 936315, 936325, HPM36W340LGAT, HPM36W340LNAT, HPM36W600LCAT, HPM36W600LNAT, HPM36W760MCAT, HPM36W760MGAT, HPM36W760MNAT, HPM36W760MNAT-BW

36” Direct Drive Fans

936350, 936360-SC, 936370, 936370-SC, HPM36W280MCA, HPM36W280MGA, HPM36W280MGA-BW, HPM36W280MSA

©2026 Valco Industries, Inc.

54” Fiberglass Interior Fans with Long Cones - Exploded Fan Overview

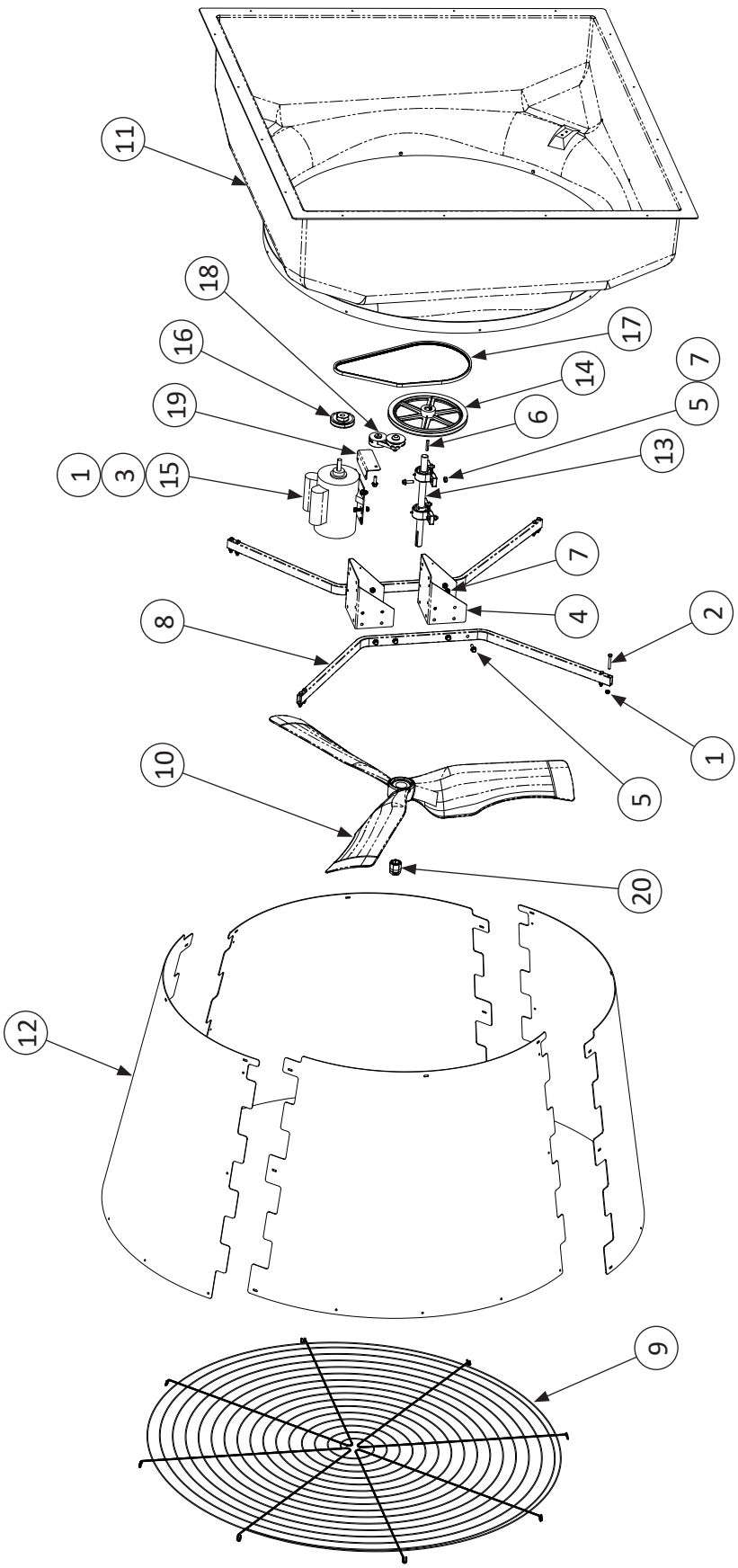

©2026 Valco Industries, Inc.

©2026 Valco Industries, Inc.

54” Fiberglass Interior Fans with Long Cones: Single Phase - Parts List

FAN PART #			954200	954200-BW	954200-SC	954205	954210	954210-BW	954210-SC	954215	954605-SC*	954615-SC*
KEY	DESCRIPTION	QTY	PART #									
1	5/16-18 FLANGE HEX NUT	12	501441	501441	MH8056	501441	501441	501441	MH8056	501441	MH8056	MH8056
2	5/16-18 X 2-1/4” HEX BOLT	8	690257	690257	MH8097	690257	690257	690257	MH8097	690257	MH8097	MH8097
3	5/16-18 X 3/4” FLANGE BOLT	4	690389	690389	MH8091	690389	690389	690389	MH8091	690389	MH8091	MH8091
4	MOTOR MOUNT BRACKET	2	936008	936008	FP449	936008	936008	936008	FP449	936008	FP449	FP449
5	3/8-16 X 1-1/4” FLANGE BOLT	13	936026	936026	MH8124	936026	936026	936026	MH8124	936026	MH8124	MH8124
6	KEY	1	936032	936032	936032	936032	936032	936032	936032	936032	936032	936032
7	3/8-16 NUT	12	936054	936054	MH8057	936054	936054	936054	MH8057	936054	MH8057	MH8057
8	MOTOR MOUNT RAILS	2	948007	948007	FP448	948007	948007	948007	FP448	948007	FP448	FP448
9	EXHAUST CONE GRILL	1	954001	954001	954001	954001	954001	954001	954001	954001	954001	954001
10	FAN BLADE	1	954060	954060	954060	954031	954060	954060	954060	954031	954032	954032
11	HOUSING	1	954163	954023	954163	954163	954163	954023	954163	954163	954163	954163
12	CONE PANEL	4	954184	954184	954184	954184	954184	954184	954184	954184	954184	954184
13	FAN SHAFT & BEARING ASSY	1	980113	980113	980113	980113	980113	980113	980113	980113	980113	980113
14	BLADE PULLEY	1	980024	980024	980024	980024	980015	980015	980015	980015	980015	980015
15	MOTOR	1	980032	980032	980032	980032	980032	980032	980032	980032	980032	980032
16	MOTOR PULLEY	1	980035	980035	980035	980035	980033	980033	980033	980033	980033	980007
17	BELT	1	980038	980038	980038	980038	980030	980030	980030	980030	980030	980030
18	AUTO TENSIONER	1	980066	980066	980066	980066	980066	980066	980066	980066	980066	980066
19	AUTO TENSIONER BRACKET	1	954338	954338	954339	954338	980068	980068	980039	980068	980039	980039
20	BLADE KEY or TRANTORQUE	1	ZFB302	ZFB302	ZFB302	936032	ZFB302	ZFB302	ZFB302	936032	936032	936032

* obsolete

54” Fiberglass Interior Fans with Long Cones: Three Phase - Parts List

FAN PART #			954240	954245	954245-BW	954245-SC	954255	954255-SC	954280	954280-BW	954280-SC	954285	954295	954640-SC*	954685-SC*	954695-SC*
KEY	DESCRIPTION	QTY	PART #													
1	5/16-18 FLANGE HEX NUT	12	501441	501441	501441	MH8056	501441	MH8056	501441	501441	MH8056	501441	501441	MH8056	MH8056	MH8056
2	5/16-18 X 2-1/4” HEX BOLT	8	690257	690257	690257	MH8097	690257	MH8097	690257	690257	MH8097	690257	690257	MH8097	MH8097	MH8097
3	5/16-18 X 3/4” FLANGE BOLT	4	690389	690389	690389	MH8091	690389	MH8091	690389	690389	MH8091	690389	690389	MH8091	MH8091	MH8091
4	MOTOR MOUNT BRACKET	2	936008	936008	936008	FP449	936008	FP449	936008	936008	FP449	936008	936008	FP449	FP449	FP449
5	3/8-16 X 1-1/4” FLANGE BOLT	13	936026	936026	936026	MH8124	936026	MH8124	936026	936026	MH8124	936026	936026	MH8124	MH8124	MH8124
6	KEY	1	936032	936032	936032	936032	936032	936032	936032	936032	936032	936032	936032	936032	936032	936032
7	3/8-16 NUT	12	936054	936054	936054	MH8057	936054	MH8057	936054	936054	MH8057	936054	936054	MH8057	MH8057	MH8057
8	MOTOR MOUNT RAILS	2	948007	948007	948007	FP448	948007	FP448	948007	948007	FP448	948007	948007	FP448	FP448	FP448
9	EXHAUST CONE GRILL	1	954001	954001	954001	954001	954001	954001	954001	954001	954001	954001	954001	954001	954001	954001
10	FAN BLADE	1	954031	954060	954060	954060	954060	954060	954060	954060	954060	954031	954031	954032	954032	954032
11	HOUSING	1	954163	954163	954023	954163	954163	954163	954163	954023	954163	954163	954163	954163	954163	954163
12	CONE PANEL	4	954184	954184	954184	954184	954184	954184	954184	954184	954184	954184	954184	954184	954184	954184
13	FAN SHAFT & BEARING ASSY	1	980113	980113	980113	980113	980113	980113	980113	980113	980113	980113	980113	980113	980113	980113
14	BLADE PULLEY	1	980026	980026	980026	980026	980026	980026	980026	980026	980026	980026	980026	980026	980015	980026
15	MOTOR	1	980031	980031	980031	980031	980031	980031	980079	980079	980079	980079	980031	980031	980079	980031
16	MOTOR PULLEY	1	980025	980025	980025	980025	980007	980007	980007	980007	980007	980033	980035	980033	980035	980009
17	BELT	1	980012	980012	980012	980012	ZV747	ZV747	ZV747	ZV747	ZV747	ZV747	ZV747	ZV747	980036	ZV747
18	AUTO TENSIONER	1	980066	980066	980066	980066	980066	980066	980066	980066	980066	980066	980066	980066	980066	980066
19	AUTO TENSIONER BRACKET	1	980068	980068	980068	980039	980068	980039	980068	980068	980039	980068	980068	980039	980039	980039
20	BLADE KEY or TRANTORQUE	1	936032	ZFB302	ZFB302	ZFB302	ZFB302	ZFB302	ZFB302	ZFB302	ZFB302	936032	936032	936032	936032	936032

* obsolete

54” Fiberglass Exterior Fans with Long Cones - Exploded Fan Overview

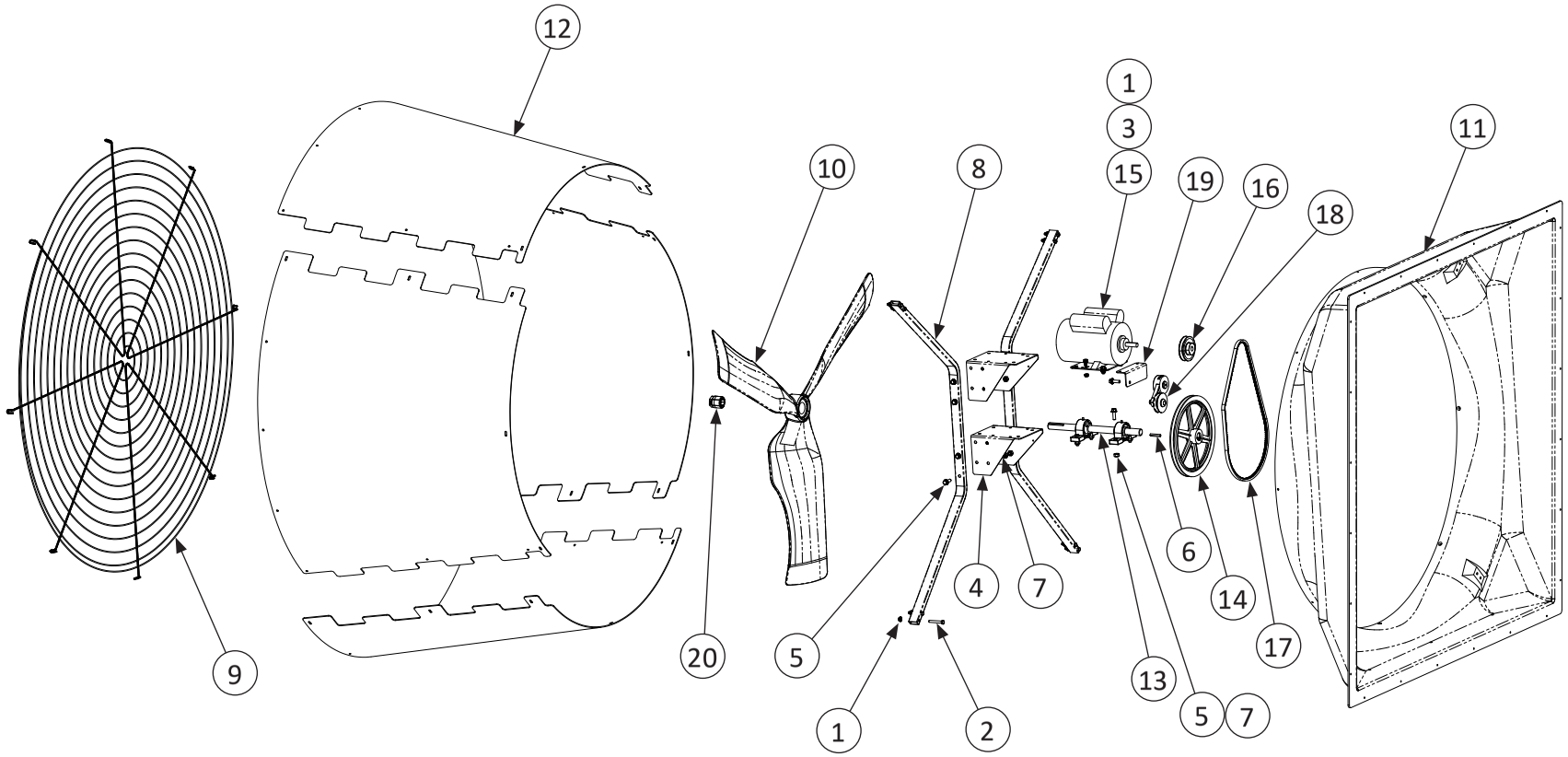

©2026 Valco Industries, Inc.

©2026 Valco Industries, Inc.

54” Fiberglass Exterior Fans with Long Cones: Single Phase - Parts List

FAN PART #			954201	954201-SC	954206	954211	954211-SC	954216	954606-SC*	954616-SC*
KEY	DESCRIPTION	QTY	PART #							
1	5/16-18 FLANGE HEX NUT	12	501441	MH8056	501441	501441	MH8056	501441	MH8056	MH8056
2	5/16-18 X 2-1/4” HEX BOLT	8	690257	MH8097	690257	690257	MH8097	690257	MH8097	MH8097
3	5/16-18 X 3/4” FLANGE BOLT	4	690389	MH8091	690389	690389	MH8091	690389	MH8091	MH8091
4	MOTOR MOUNT BRACKET	2	936008	FP449	936008	936008	FP449	936008	FP449	FP449
5	3/8-16 X 1-1/4” FLANGE BOLT	13	936026	MH8124	936026	936026	MH8124	936026	MH8124	MH8124
6	KEY	1	936032	936032	936032	936032	936032	936032	936032	936032
7	3/8-16 NUT	12	936054	MH8057	936054	936054	MH8057	936054	MH8057	MH8057
8	MOTOR MOUNT RAILS	2	948007	FP448	948007	948007	FP448	948007	FP448	FP448
9	EXHAUST CONE GRILL	1	954001	954001	954001	954001	954001	954001	954001	954001
10	FAN BLADE	1	954060	954060	954031	954060	954060	954031	954032	954032
11	HOUSING	1	954164	954164	954164	954164	954164	954164	954164	954164
12	CONE PANEL	4	954184	954184	954184	954184	954184	954184	954184	954184
13	FAN SHAFT & BEARING ASSY	1	980113	980113	980113	980113	980113	980113	980113	980113
14	BLADE PULLEY	1	980024	980024	980024	980015	980015	980015	980015	980015
15	MOTOR	1	980032	980032	980032	980032	980032	980032	980032	980032
16	MOTOR PULLEY	1	980035	980035	980035	980033	980033	980033	980033	980007
17	BELT	1	980038	980038	980038	980030	980030	980030	980030	980030
18	AUTO TENSIONER	1	980066	980066	980066	980066	980066	980066	980066	980066
19	AUTO TENSIONER BRACKET	1	954338	954339	954338	980068	980039	980068	980039	980039
20	BLADE KEY or TRANTORQUE	1	ZFB302	ZFB302	936032	ZFB302	ZFB302	936032	936032	936032

* obsolete

54” Fiberglass Exterior Fans with Long Cones: Three Phase - Parts List

FAN PART #			954241	954246	954246-SC	954256	954256-SC	954281	954281-SC	954286	954296	954641-SC*	954686-SC*	954696-SC*
KEY	DESCRIPTION	QTY	PART #											
1	5/16-18 FLANGE HEX NUT	12	501441	501441	MH8056	501441	MH8056	501441	MH8056	501441	501441	MH8056	MH8056	MH8056
2	5/16-18 X 2-1/4” HEX BOLT	8	690257	690257	MH8097	690257	MH8097	690257	MH8097	690257	690257	MH8097	MH8097	MH8097
3	5/16-18 X 3/4” FLANGE BOLT	4	690389	690389	MH8091	690389	MH8091	690389	MH8091	690389	690389	MH8091	MH8091	MH8091
4	MOTOR MOUNT BRACKET	2	936008	936008	FP449	936008	FP449	936008	FP449	936008	936008	FP449	FP449	FP449
5	3/8-16 X 1-1/4” FLANGE BOLT	13	936026	936026	MH8124	936026	MH8124	936026	MH8124	936026	936026	MH8124	MH8124	MH8124
6	KEY	1	936032	936032	936032	936032	936032	936032	936032	936032	936032	936032	936032	936032
7	3/8-16 NUT	12	936054	936054	MH8057	936054	MH8057	936054	MH8057	936054	936054	MH8057	MH8057	MH8057
8	MOTOR MOUNT RAILS	2	948007	948007	FP448	948007	FP448	948007	FP448	948007	948007	FP448	FP448	FP448
9	EXHAUST CONE GRILL	1	954001	954001	954001	954001	954001	954001	954001	954001	954001	954001	954001	954001
10	FAN BLADE	1	954031	954060	954060	954060	954060	954060	954060	954031	954031	954032	954032	954032
11	HOUSING	1	954164	954164	954164	954164	954164	954164	954164	954164	954164	954164	954164	954164
12	CONE PANEL	4	954184	954184	954184	954184	954184	954184	954184	954184	954184	954184	954184	954184
13	FAN SHAFT & BEARING ASSY	1	980113	980113	980113	980113	980113	980113	980113	980113	980113	980113	980113	980113
14	BLADE PULLEY	1	980026	980026	980026	980026	980026	980026	980026	980026	980026	980026	980015	980026
15	MOTOR	1	980031	980031	980031	980031	980031	980079	980079	980079	980031	980031	980079	980031
16	MOTOR PULLEY	1	980025	980025	980025	980007	980007	980007	980007	980033	980035	980033	980035	980009
17	BELT	1	980012	980012	980012	ZV747	ZV747	ZV747	ZV747	ZV747	ZV747	ZV747	980036	ZV747
18	AUTO TENSIONER	1	980066	980066	980066	980066	980066	980066	980066	980066	980066	980066	980066	980066
19	AUTO TENSIONER BRACKET	1	980068	980068	980039	980068	980039	980068	980039	980068	980068	980039	980039	980039
20	BLADE KEY or TRANTORQUE	1	936032	ZFB302	ZFB302	ZFB302	ZFB302	ZFB302	ZFB302	936032	936032	936032	936032	936032

* obsolete

54” Fiberglass Fans with Short Cones - Exploded Fan Overview

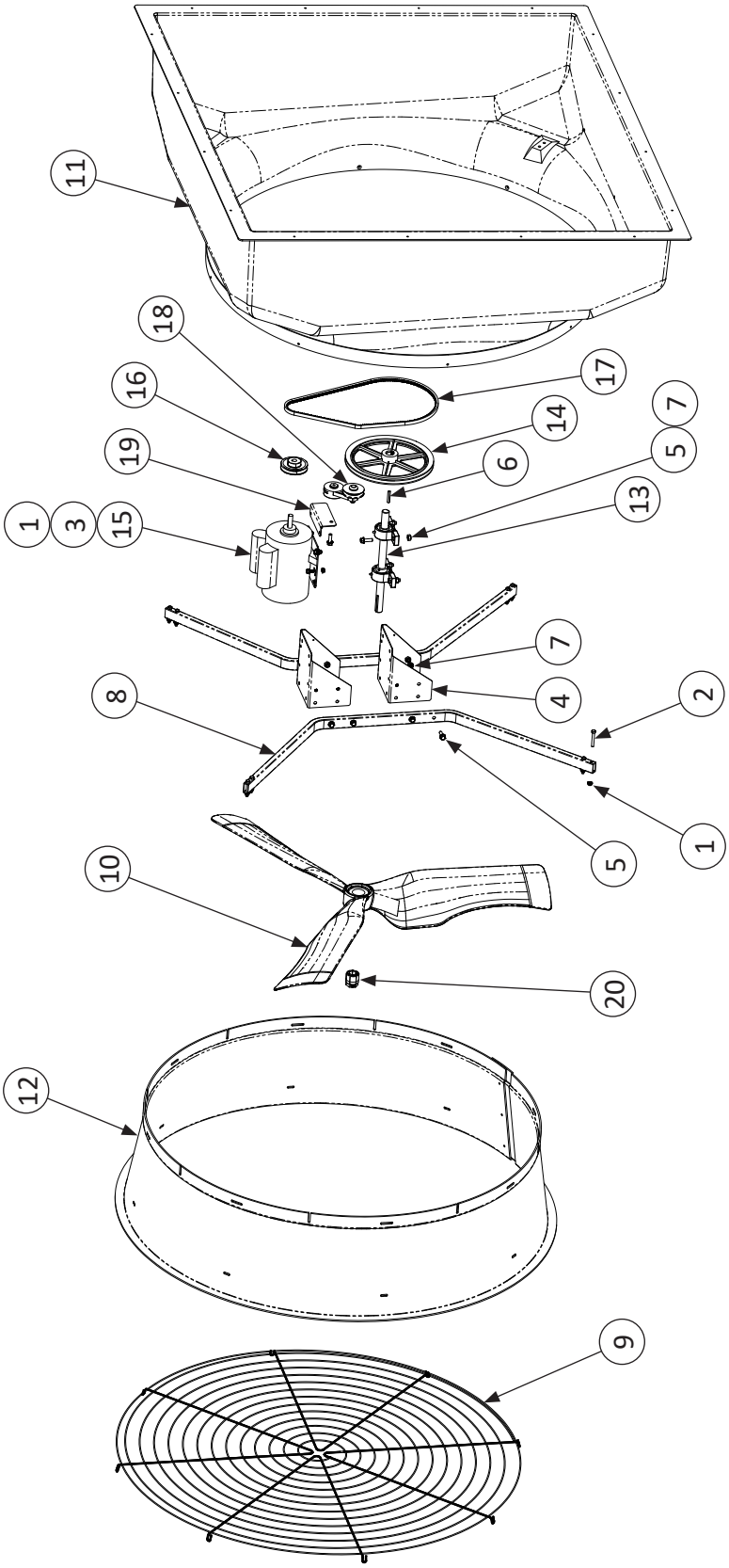

©2026 Valco Industries, Inc.

©2026 Valco Industries, Inc.

54” Fiberglass Fans with Short Cones: Single Phase - Parts List

FAN PART #			954800	954800-BW	954800-SC	954810	954810-BW	954810-SC	954815	954905-SC*	954915-SC*
KEY	DESCRIPTION	QTY	PART #								
1	5/16-18 FLANGE HEX NUT	12	501441	501441	MH8056	501441	501441	MH8056	501441	MH8056	MH8056
2	5/16-18 X 2-1/4” HEX BOLT	8	690257	690257	MH8097	690257	690257	MH8097	690257	MH8097	MH8097
3	5/16-18 X 3/4” FLANGE BOLT	4	690389	690389	MH8091	690389	690389	MH8091	690389	MH8091	MH8091
4	MOTOR MOUNT BRACKET	2	936008	936008	FP449	936008	936008	FP449	936008	FP449	FP449
5	3/8-16 X 1-1/4” FLANGE BOLT	13	936026	936026	MH8124	936026	936026	MH8124	936026	MH8124	MH8124
6	KEY	1	936032	936032	936032	936032	936032	936032	936032	936032	936032
7	3/8-16 NUT	12	936054	936054	MH8057	936054	936054	MH8057	936054	MH8057	MH8057
8	MOTOR MOUNT RAILS	2	948007	948007	FP448	948007	948007	FP448	948007	FP448	FP448
9	EXHAUST CONE GRILL	1	954039	954039	954039	954039	954039	954039	954039	954039	954039
10	FAN BLADE	1	954060	954060	954060	954060	954060	954060	954031	954032	954032
11	HOUSING	1	954163	954023	954163	954163	954023	954163	954163	954163	954163
12	CONE PANEL	1	954213W	954213B	954213W	954213W	954213B	954213W	954213W	954213W	954213W
13	FAN SHAFT & BEARING ASSY	1	980113	980113	980113	980113	980113	980113	980113	980113	980113
14	BLADE PULLEY	1	980024	980024	980024	980015	980015	980015	980015	980015	980015
15	MOTOR	1	980032	980032	980032	980032	980032	980032	980032	980032	980032
16	MOTOR PULLEY	1	980035	980035	980035	980033	980033	980033	980033	980033	980007
17	BELT	1	980038	980038	980038	980030	980030	980030	980030	980030	980030
18	AUTO TENSIONER	1	980066	980066	980066	980066	980066	980066	980066	980066	980066
19	AUTO TENSIONER BRACKET	1	954338	954338	954339	980068	980068	980039	980068	980039	980039
20	BLADE KEY or TRANTORQUE	1	ZFB302	ZFB302	ZFB302	ZFB302	ZFB302	ZFB302	936032	936032	936032

* obsolete

54” Fiberglass Fans w/Short Cones: Three Phase - Parts List

FAN PART #			954840	954845	954880	954880-BW	954880-SC	954985-SC*
KEY	DESCRIPTION	QTY	PART #					
1	5/16-18 FLANGE HEX NUT	12	501441	501441	501441	501441	MH8056	MH8056
2	5/16-18 X 2-1/4” HEX BOLT	8	690257	690257	690257	690257	MH8097	MH8097
3	5/16-18 X 3/4” FLANGE BOLT	4	690389	690389	690389	690389	MH8091	MH8091
4	MOTOR MOUNT BRACKET	2	936008	936008	936008	936008	FP449	FP449
5	3/8-16 X 1-1/4” FLANGE BOLT	13	936026	936026	936026	936026	MH8124	MH8124
6	KEY	1	936032	936032	936032	936032	936032	936032
7	3/8-16 NUT	12	936054	936054	936054	936054	MH8057	MH8057
8	MOTOR MOUNT RAILS	2	948007	948007	948007	948007	FP448	FP448
9	EXHAUST CONE GRILL	1	954039	954039	954039	954039	954039	954039
10	FAN BLADE	1	954031	954060	954060	954060	954060	954032
11	HOUSING	1	954163	954163	954163	954023	954163	954163
12	CONE PANEL	1	954213W	954213W	954213W	954213B	954213W	954213W
13	FAN SHAFT & BEARING ASSY	1	980113	980113	980113	980113	980113	980113
14	BLADE PULLEY	1	980026	980026	980026	980026	980026	980015
15	MOTOR	1	980031	980031	980079	980079	980079	980079
16	MOTOR PULLEY	1	980025	980025	980007	980007	980007	980035
17	BELT	1	980012	980012	ZV747	ZV747	ZV747	980036
18	AUTO TENSIONER	1	980066	980066	980066	980066	980066	980066
19	AUTO TENSIONER BRACKET	1	980068	980068	980068	980068	980039	980039
20	BLADE KEY or TRANTORQUE	1	936032	ZFB302	ZFB302	ZFB302	ZFB302	936032

* obsolete

50” Fiberglass Fans without Cones - Exploded Fan Overview

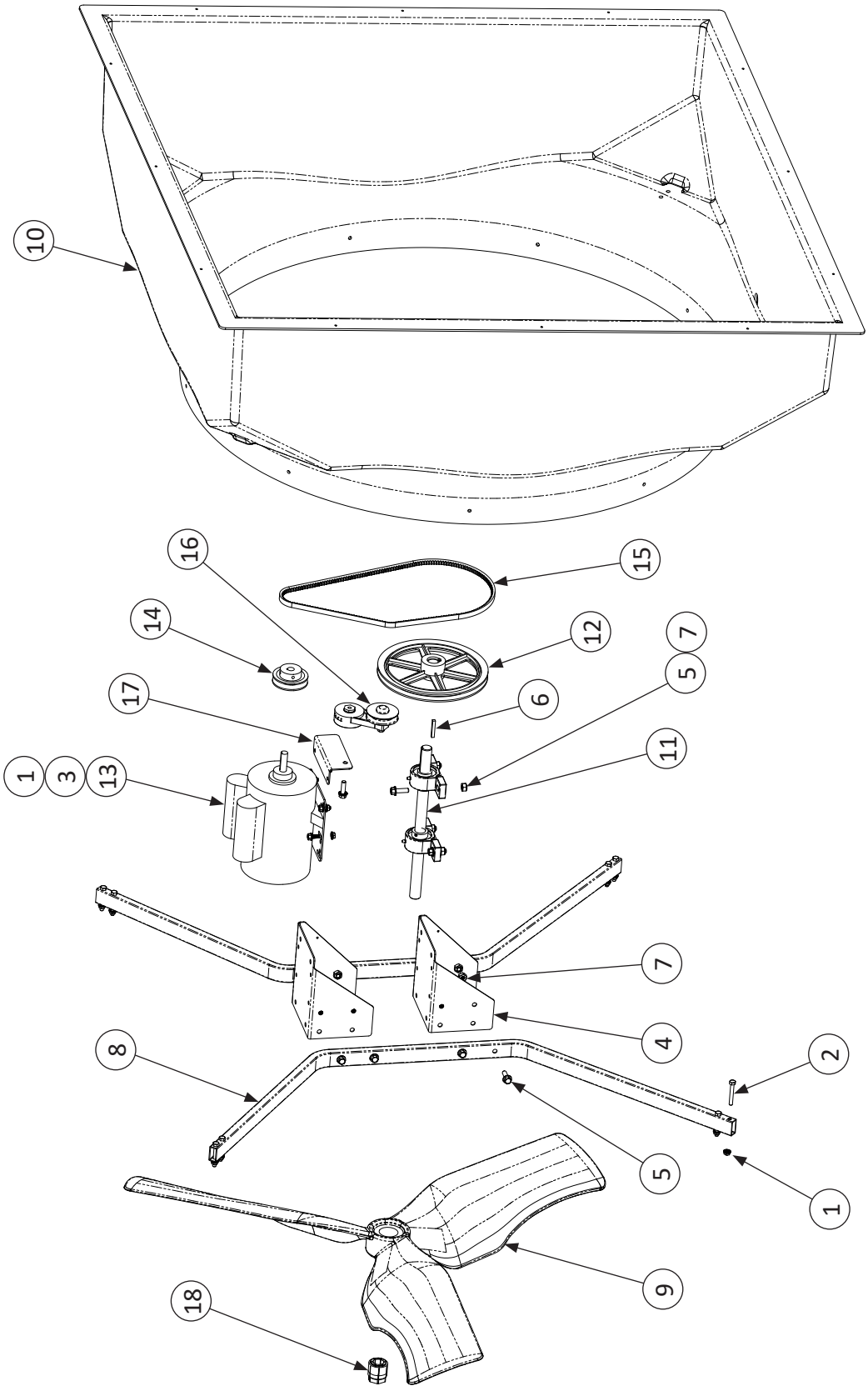

©2026 Valco Industries, Inc.

©2026 Valco Industries, Inc.

50” Fiberglass Fans without Cones: Single Phase - Parts List

FAN PART #			HPM50W340MCAT	HPM50W340MNAT	HPM50W340MSAT	HPM50W340MCAT-BW	HPM50W420LCAT	HPM50W420LNAT	HPM50W420LNAT-BW	950140	950140-BW	950140-SSHW
KEY	DESCRIPTION	QTY	PART #									
1	5/16-18 FLANGE HEX NUT	12	MH8056	501441	MH8056	MH8056	MH8056	501441	501441	501441	501441	MH8056
2	5/16-18 X 2-1/4” HEX BOLT	8	MH8097	690257	MH8097	MH8097	MH8097	690257	690257	690257	690257	MH8097
3	5/16-18 X 3/4” FLANGE BOLT	4	MH8091	690389	MH8091	MH8091	MH8091	690389	690389	690389	690389	MH8091
4	MOTOR MOUNT BRACKET	2	FP449	936008	FP449	FP449	FP449	936008	936008	936008	936008	FP449
5	3/8-16 X 1-1/4” FLANGE BOLT	13	MH8124	936026	MH8124	MH8124	MH8124	936026	936026	936026	936026	MH8124
6	KEY	1	936032	936032	936032	936032	936032	936032	936032	936032	936032	936032
7	3/8-16 NUT	12	MH8057	936054	MH8057	MH8057	MH8057	936054	936054	936054	936054	MH8057
8	MOTOR MOUNT RAILS	2	FP448	948007	FP448	FP448	FP448	948007	948007	948007	948007	FP448
9	FAN BLADE	1	B718	B718	B387	B718	B718	B718	B718	B718	B718	B718
10	HOUSING	1	FP13210W	FP13210W	FP13210W	950112	FP13210W	FP13210W	950112	FP13210W	950112	FP13210W
11	FAN SHAFT & BEARING ASSY	1	980113	980113	980113	980113	980113	980113	980113	980113	980113	980113
12	BLADE PULLEY	1	980015	980015	980015	980015	980015	980015	980015	980026	980026	980026
13	MOTOR	1	980032	980032	980032	980032	980032	980032	980032	980032	980032	980032
14	MOTOR PULLEY	1	980033	980033	980007	980033	980007	980007	980007	980033	980033	980033
15	BELT	1	980030	980030	980030	980030	980030	980030	980030	980012	980012	980012
16	AUTO TENSIONER	1	980066	980066	980066	980066	980066	980066	980066	980066	980066	980066
17	AUTO TENSIONER BRACKET	1	980039	980068	980039	980039	980039	980068	980068	980068	980068	980039
18	BLADE KEY or TRANTORQUE	1	ZFB302	ZFB302	936032	ZFB302	ZFB302	ZFB302	ZFB302	ZFB302	ZFB302	ZFB302

50” Fiberglass Fans without Cones: Three Phase - Parts List

FAN PART #			HPM50W600MCAT	HPM50W600MNAT	HPM50W600MNAT-BW	950225	950225-SSHW	950235	950235-SSHW	950255	950255-BW
KEY	DESCRIPTION	QTY	PART #								
1	5/16-18 FLANGE HEX NUT	12	MH8056	501441	501441	501441	MH8056	501441	MH8056	501441	501441
2	5/16-18 X 2-1/4” HEX BOLT	8	MH8097	690257	690257	690257	MH8097	690257	MH8097	690257	690257
3	5/16-18 X 3/4” FLANGE BOLT	4	MH8091	690389	690389	690389	MH8091	690389	MH8091	690389	690389
4	MOTOR MOUNT BRACKET	2	FP449	936008	936008	936008	FP449	936008	FP449	936008	936008
5	3/8-16 X 1-1/4” FLANGE BOLT	13	MH8124	936026	936026	936026	MH8124	936026	MH8124	936026	936026
6	KEY	1	936032	936032	936032	936032	936032	936032	936032	936032	936032
7	3/8-16 NUT	12	MH8057	936054	936054	936054	MH8057	936054	MH8057	936054	936054
8	MOTOR MOUNT RAILS	2	FP448	948007	948007	948007	FP448	948007	FP448	948007	948007
9	FAN BLADE	1	B718	B718	B718	B718	B718	B718	B718	B718	B718
10	HOUSING	1	FP13210W	FP13210W	950112	FP13210W	FP13210W	FP13210W	FP13210W	FP13210W	950112
11	FAN SHAFT & BEARING ASSY	1	980113	980113	980113	980113	980113	980113	980113	980113	980113
12	BLADE PULLEY	1	980015	980015	980015	980015	980015	980010	980010	980026	980026
13	MOTOR	1	980002	980002	980002	980031	980031	980031	980031	980079	980079
14	MOTOR PULLEY	1	980033	980033	980033	980035	980035	980007	980007	980035	980035
15	BELT	1	980030	980030	980030	980036	980036	980011	980011	ZV747	ZV747
16	AUTO TENSIONER	1	980066	980066	980066	980066	980066	980066	980066	980066	980066
17	AUTO TENSIONER BRACKET	1	980039	980068	980068	980068	980039	980068	980039	980068	980068
18	BLADE KEY or TRANTORQUE	1	ZFB302	ZFB302	ZFB302	ZFB302	ZFB302	ZFB302	ZFB302	ZFB302	ZFB302

36” Fiberglass Belt-Driven Fans without Cones - Exploded Fan Overview

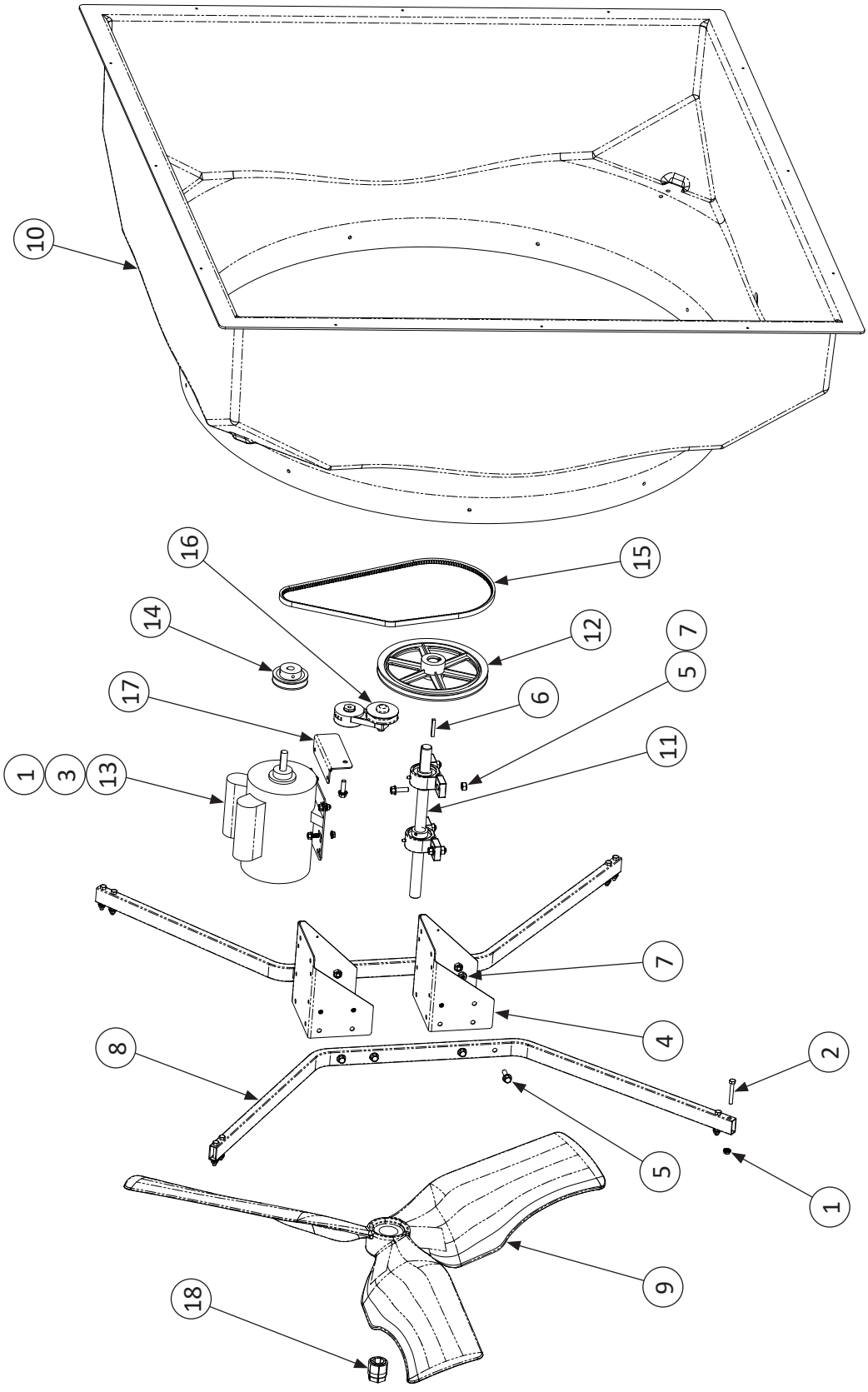

©2026 Valco Industries, Inc.

©2026 Valco Industries, Inc.

36” Fiberglass Belt-Driven Fans without Cones - Parts List

FAN PART #			936310	936315-SC	936325	HPM36W340LGAT	HPM36W340LNAT	HPM36W600LCAT	HPM36W600LNAT	HPM36W760MGAT	HPM36W760MCAT	HPM36W760MNAT	HPM36W760MNAT-BW
KEY	DESCRIPTION	QTY	PART #										
1	5/16-18 FLANGE HEX NUT	12	MH8056	MH8056	501441	501441	501441	MH8056	501441	501441	MH8056	501441	501441
2	5/16-18 X 2-1/4” HEX BOLT	8	MH8097	MH8097	690257	690257	690257	MH8097	690257	690257	MH8097	690257	690257
3	5/16-18 X 3/4” FLANGE BOLT	4	MH8091	MH8091	690389	690389	690389	MH8091	690389	690389	MH8091	690389	690389
4	MOTOR MOUNT BRACKET	2	FP449	FP449	936008	936008	936008	FP449	936008	936008	FP449	936008	936008
5	3/8-16 X 1-1/4” FLANGE BOLT	13	MH8124	MH8124	936026	936026	936026	MH8124	936026	936026	MH8124	936026	936026
6	KEY	1	936032	936032	936032	936032	936032	936032	936032	936032	936032	936032	936032
7	3/8-16 NUT	12	MH8057	MH8057	936054	936054	936054	MH8057	936054	936054	MH8057	936054	936054
8	MOTOR MOUNT RAILS	2	FP523	FP523	936007	936007	936007	FP523	936007	936007	FP523	936007	936007
9	FAN BLADE	1	B758	B758	936031	936031	FP489	FP489	FP489	936031	FP489	FP489	FP489
10	HOUSING	1	FP348W	FP348W	FP348W	FP348W	FP348W	FP348W	FP348W	FP348W	FP348W	FP348W	936065
11	FAN SHAFT & BEARING ASSY	1	980113	980113	980113	980113	980113	980113	980113	980113	980113	980113	980113
12	BLADE PULLEY	1	980010	980010	980082	980082	980010	980010	980010	980010	980010	980010	980010
13	MOTOR	1	980032	980031	980031	980032	980032	980002	980002	980004	980004	980004	980004
14	MOTOR PULLEY	1	980035	980035	980009	980009	ZV775	ZV775	ZV775	980027	980091	980091	980091
15	BELT	1	980011	980011	980085	980085	ZV747	ZV747	ZV747	980011	980012	980012	980012
16	AUTO TENSIONER	1	980066	980066	980066	980066	980066	980066	980066	980066	980066	980066	980066
17	AUTO TENSIONER BRACKET	1	980039	980039	980068	980068	980068	980039	980068	980068	980039	980068	980068
18	BLADE KEY or TRANTORQUE	1	936032	936032	936032	936032	ZFB302	ZFB302	ZFB302	936032	ZFB302	ZFB302	ZFB302

36” Fiberglass Direct Drive Fans without Cones - Exploded Fan Overview

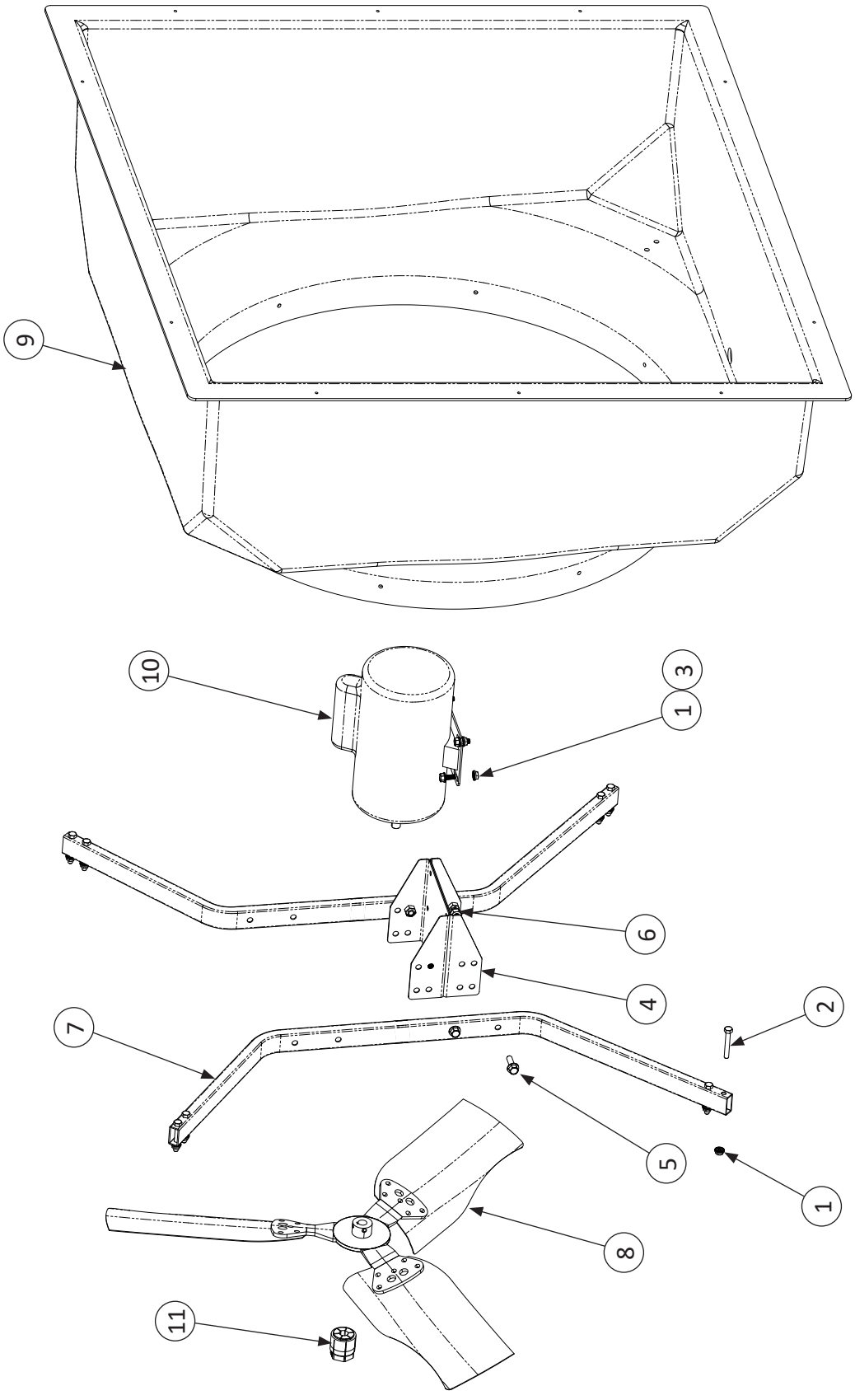

©2026 Valco Industries, Inc.

©2026 Valco Industries, Inc.

36” Fiberglass Direct Drive Fans without Cones - Parts List

FAN PART #			936350	936360-SC	936370	936370-SC	HPM36W280MCA	HPM36W280MGA	HPM36W280MGA-BW	HPM36W280MSA
KEY	DESCRIPTION	QTY	PART #							
1	5/16-18 FLANGE HEX NUT	12	501441	MH8056	501441	MH8056	MH8056	501441	501441	MH8056
2	5/16-18 X 2-1/4” HEX BOLT	8	690257	MH8097	690257	MH8097	MH8097	690257	690257	MH8097
3	5/16-18 X 3/4” FLANGE BOLT	4	690389	MH8091	690389	MH8091	MH8091	690389	690389	MH8091
4	MOTOR MOUNT BRACKET	2	936012	FP515	936012	FP515	FP515	936012	936012	FP515
5	3/8-16 X 1-1/4” FLANGE BOLT	4	936026	MH8124	936026	MH8124	MH8124	936026	936026	MH8124
6	3/8-16 NUT	4	936054	MH8057	936054	MH8057	MH8057	936054	936054	MH8057
7	MOTOR MOUNT RAILS	2	936007	FP523	936007	FP523	FP523	936007	936007	FP523
8	FAN BLADE	1	936052	936058	FP489	FP489	FP489	936052	936052	936058
9	HOUSING	1	FP348W	FP348W	FP348W	FP348W	FP348W	FP348W	936065	FP348W
10	MOTOR	1	980094	980094	980094	980094	M781	M781	M781	M781
11	BLADE KEY	1	-	-	ZFB306	ZFB306	ZFB306	-	-	-

36” & 50” Poly Cones - Replacement / Repair Part Numbers

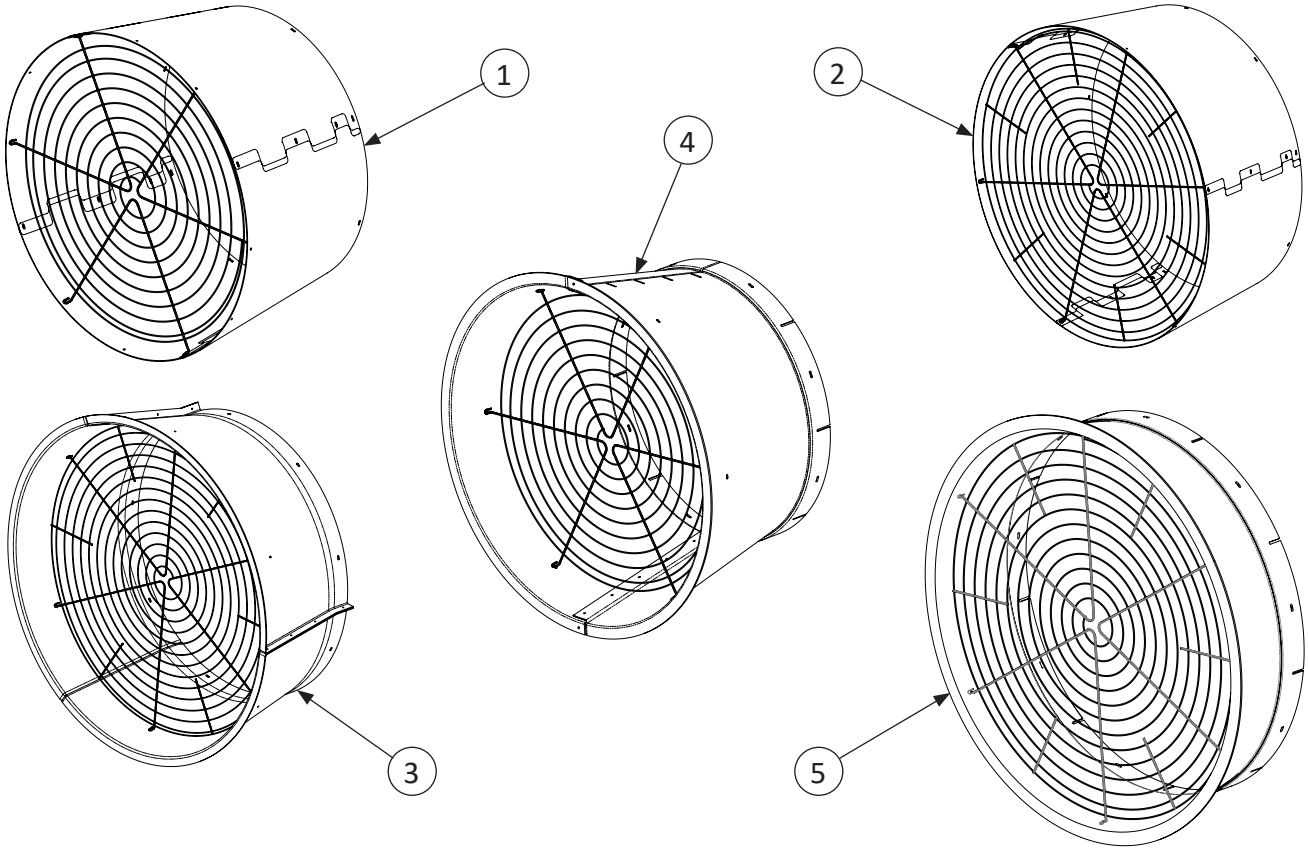

KEY	PART #	QTY	DESCRIPTION
36” & 50” POLY CONE KITS & PART NUMBERS			
1	936174		36” PANEL CONE, 4 SECTIONS WITH GRILL - WHITE
	936184	4	CONE SECTION, 36” SLANT WALL
	FP406CH	1	36” PMC GUARD SCREEN
2	950174		50” WHITE PANEL SHORT CONE, 3 SECTIONS W/ GRILL, 26” LONG
	950184	3	CONE SECTION, 50” SLANT WALL
	FP3881CH	1	48” PMC CONE GUARD SCREEN
3	FC50LW		50” WHITE FIBERGLASS CONE, 26” LONG
	FP3881CH	1	48” PMC CONE GUARD SCREEN
	FPN13207W	3	50” WHITE FIBERGLASS CONE
4	PC36LB		36” POLY CONE - BLACK
	FP406CH	1	36” PMC GUARD SCREEN
	FP855B	2	PMC 36” POLY CONE, BLACK, 26-1/2” LONG MOLDED POLY
4	PC36LW		36” POLY CONE - WHITE
	FP406CH	1	36” PMC GUARD SCREEN
	FP855W	2	PMC 36” POLY CONE, WHITE, 26-1/2” LONG MOLDED POLY
5	PC50SB		50” BLACK POLY 1 PIECE CONE, 15” LONG
	FP13235B	1	50” BLACK POLY CONE/SHORT
	FP408CH	1	GUARD SCREEN, 50” PMC SHORT CONE
5	PC50SW		50” WHITE POLY 1 PIECE CONE, 15” LONG
	FP13235A02W	1	50” WHITE POLY CONE/SHORT
	FP408CH	1	GUARD SCREEN, 50” PMC SHORT CONE

Note: No hardware is provided with these kits. The cone hardware comes with the fan or is sold separately.

©2026 Valco Industries, Inc.

Hardware - Replacement / Repair Part Numbers

Hardware depicted are not actual size or to scale.

Hardware used to assemble various components to fiberglass housings:

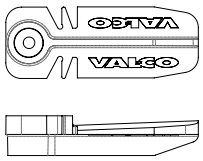

Shutter Clip
936013

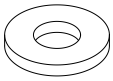

1/4” ID x 5/8” OD
Flat Washer
010424 (ZP)
MH8029 (SS)

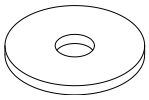

1/4” ID x 1” OD
Flat Washer
690294 (ZP)
690413 (SS)

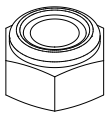

1/4-20
Nylock Nut
012793 (ZP)
MH90043 (SS)

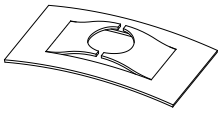

1/4-20
Push Nut
690380

Key:
(SS) = Stainless Steel
(ZP) = Zinc Plated

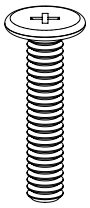

1/4-20 x 1-1/4”
Flat Head Screw
MH90429
(SS, 36” & 50” Fans)

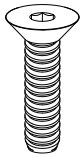

1/4-20 x 1”
Flat Head Screw
690392 (ZP)
690386 (SS, 54” Fans)

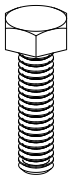

1/4-20 x 1”
Hex Bolt
690025 (ZP)
MH90168 (SS)

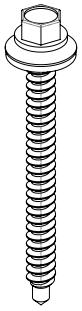

10-12 x 2”
Sheet Metal Screw
012814 (ZP) - White
936057 (ZP) - Black
MH8206 (SS)

Hardware shown above can be found in the following Parts Bags:
36” & 50” Fans: MH94224 (SS) and 936096 (ZP)
54” Fans: 954178 (SS) and 954173 (ZP)

©2026 Valco Industries, Inc.